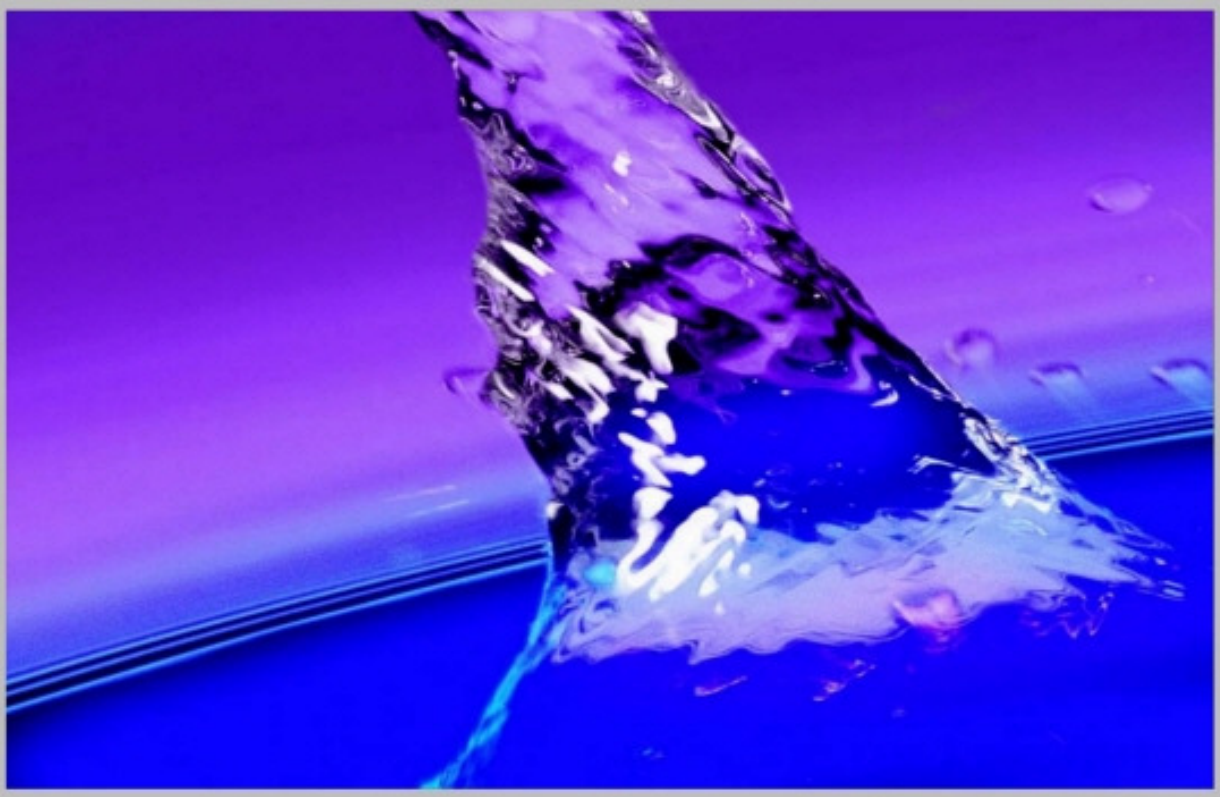

KSR Magnetic Level Indicators / Gauges

1015-2

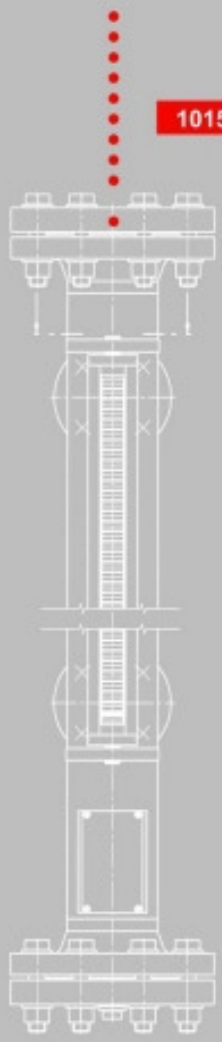

KSR KUEBLER

KSR KUEBLER
Niveau-Messtechnik AG

69439 Zwingenberg
Germany
Tel ++49 (0) 62 63 - 87- 0
Fax ++49 (0) 62 63 - 87 99
info@ksr-kuebler.com
www.ksr-kuebler.com

1015-2

KUBLER FRANCE S.A.
68700 Cernay

KSR KUEBLER (UK)
Level Measurement & Control Ltd.
Corwen, Denbigshire LL21 9PU

KSR KUEBLER (SCANDINAVIA)
2970 Hoersholm

KSR KUEBLER (ITALY)
Misura di Livello
24030 Brembate S.(BG)

KSR H&H Measurement BV (BENELUX)
5133 NE, Riel

OOO KSR KUEBLER RUS (RUS)
109428 Moskau

KSR KUEBLER (USA)
Level Control Products of America Inc.
Charlotte, NC 28273

KSR KUEBLER (SINGAPORE)
Level Measurement & Control Pte. Ltd.
Singapore 608609

SHANGHAI KSR KUEBLER
Automation Instruments Co. Ltd.
Shanghai / China

Approvals

ATEX 94/9/EC

PED 97/23/EC

Germany
Technischer Überwachungsverein Südwestdeutschland e.V.

IBExU Institut für Sicherheitstechnik GmbH

Physikalisch Technische Bundesanstalt PTB

Bundesamt für Wehrtechnik und Beschaffung

Germanischer Lloyd

Netherlands
KEMA

France
Laboratoire Central des Industries Electriques

Bureau Veritas

Denmark
DEMKO

Norway
Det Norske Veritas

Russia
Gosgortechnadzor OGS Oil & Gas Safety

GOST Permission to use Pattern Approval/EX

USA
Factory Mutual Research Corporation

Contents

1015-2

KSR Magnetic Level Indicators / Gauges

KSR KUEBLER

Operating Principle

A communicating bypass chamber is flanged to the side of a vessel, and as the liquid level in the tank rises or falls, a float with a built-in magnetic system inside the chamber rises or falls with it. The chamber is completely sealed so that the only moving part of the apparatus in contact with the liquid is the float itself (see below).

On the ‚dry side' of the chamber is the KSR Magnetic Roller Display, a column of magnetic rollers which are white on one side and red on the other. The rollers are made from plastic (MRA) or ceramics (MRK) with a distance of 10 mm between their axes. As the float moves up or down the bunched field of the permanent magnet mounted in its top section ‚pulls' the rollers through a rotation of 180°, thus changing their colour. As the float rises the rollers are turned from white to red, and as the float falls, they are changed back to white again. This means that at any given time the amount of liquid in the tank is constantly represented by a red column without any external power supply.

Technical Advantages

- Simple, robust, and solid design
- Pressure- and gas-proof separation of chamber and display
- Measuring and indicating of the level of aggressive, combustible, toxic, hot, agitated, and contaminated liquids
- KSR Magnetic Roller Displays without external power supply
- Available for applications in all areas of industry through use of highly corrosion-resistant materials
- Designs for a pressure range from full vacuum to 420 bar
- Designs for temperatures from -160°C to +450°C

Special Designs

- Food industry design
- Interface measurement
- enamelled

Options

As options the following devices can be attached to a KSR Magnetic Level Indicator to monitor and control the level of the liquid.

KSR Level Sensors

KSR Level Sensors are used to measure and transmit the level in conjunction with a KSR control unit. This control unit converts the resistance value of the level sensor to a proportional analogue signal.

KSR Magnetic Switches

KSR Magnetic switches are used to monitor certain limits of the level. The obtained binary signal can be forwarded to trigger alarms or other controls.

1015-2

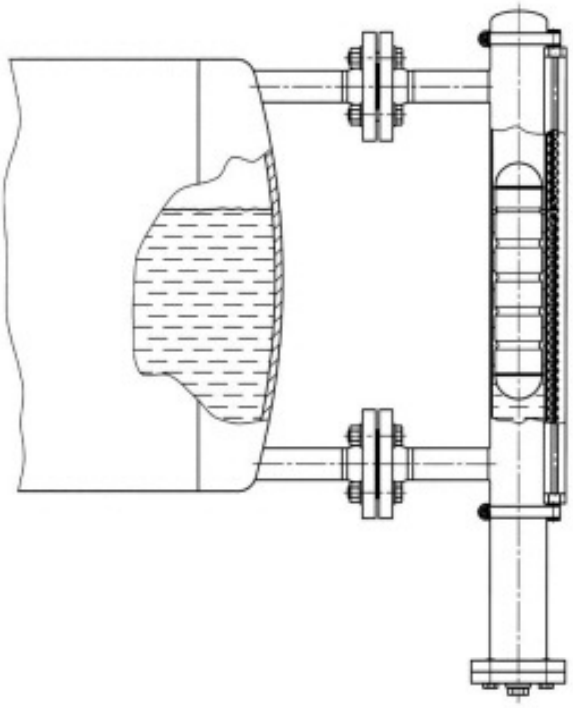

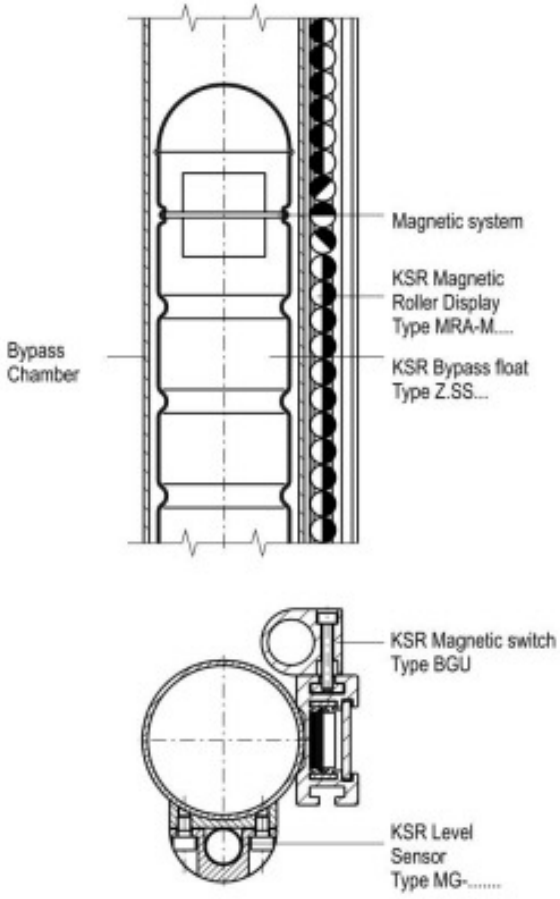

KSR Magnetic Level Indicators / Gauges
Type code

KSR KUEBLER

Code

1 — Basic type

BNA	Magnetic Level Indicator

2 — Process connections

.../.../...	.../	Flange 1st Key = Nom. size	/.../	2nd Key = Nom. pressure	/...	3rd Key = Flange face Standard optional
DIN		DN 10 - DN 100		PN 6 - PN 400		Form C E, A, F, N
ANSI		½" - 4"		Class 150 - 2500		Form RF RTJ, FF, ST, SG
JIS		⅜" (DN 10) - 4" (DN 100)		5 K - 63 K		Form RF RTJ, FF, ST, SG
		Thread or Welding stubs	.../	1st Key M or N	/...	2nd Key Thread size
	G../..	Thread acc. to DIN	**M**	female		e.g. GM 1"
	NPT../..	Thread acc. to NPT	**N**	male		e.g. NPTN 1"
	S..	Welding stubs		Key for welding stub-OD e.g. S ¾"		

3 — Option Level Sensor (see separate type code page 28)

...	**MG**	Basic type without optional code

4 — Distance centre-to-centre

...	**M...**	Distance between flange centres in mm

5 — Material and chamber dimensions 1st Key = Material; 2nd Key = Chamber dimensions

.../..x..	**V**	Stainless steel 316 Ti	**HB**	Hastelloy B	**..x..**	Chamber OD x Wall thickness in mm
	VE	Stainless steel electro-polished	**HC**	Hastelloy C		
	VTF	Stainless steel PTFE-lined	MO	Stainless steel (6Mo) 1.4529		
	VET	Stainless steel E-TFE-coated	**P**	PVC		
	VEC	Stainless steel E-CTFE-coated	**PP**	Polypropylene		
	L	Stainless steel 316 L	**PF**	PVDF		
	T	Titanium Grade 2	**G**	Borosilicate glass		

6 — Magnetic Roller Display

.../...	**MRA**	Aluminium housing with plastic rollers **MNAV**		Stainless steel housing with plastic rollers
	MRK	Aluminium housing with ceramic rollers	**MNKV**	Stainless steel housing with ceramic rollers
	MRAN	Aluminium housing with plastic rollers - shock-proof		
		Optional code		
	/SK	with scale (plastic), graduation in cm (printed)	**/VSG**	with scale (Stainl. Steel engraved), graduation selectable
	/SG	with scale (Aluminium engraved), graduation selectable	**/P**	with sight glass extender (for insulations)

7 — Option Magnetic Switches, 1st Key = Quantity magnetic switches, 2nd Key = Magnetic switch type

.../.../...	**M**	BGU-1 PVC	**MAE**	BGU-A-E	**MI**	STMI (initiator)	**MVDGA**	BGU-V-EEx d-1 PURA
	MT	BGU-1 Sil	**MAGL**	BGU-A-GL	**MV**	BGU-V-1 PVC	**MSDA**	MSDA
	ME	BGU-1 PVC blue	**MD**	BGU-EEx d-1 PVC	**MVT**	BGU-V-1 Sil	**MPS**	MPS
	MGL	BGU-GL-1 LMGSG	**MDT**	BGU-EEx d-1 Sil	**MVE**	BGU-V-E-1 PVC blue	**MPO**	MPO
	MSt	BGU-S 716	**MDG**	BGU-EEx d-1 PUR	**MVD**	BGU-V-EEx d-1 PVC	**MDA**	MDA
	MESt	BGU-E-S 716	**MDGA**	BGU-EEx d-1 PURA	**MVDT**	BGU-V-EEx d-1 Sil		
	MA	BGU-A	**MHT**	STMU	**MVDG**	BGU-V-EEx d-1 PUR		
		Optional code						
	/...	Cable length in meters	**/R..**	with resistor 22 Ohm (connected to PLC)			**/N**	NAMUR circuit

8 — Float (cylindrical) 1st Key = Float material, 2nd Key = Float length in mm

Z..S..	**.V...**	Stainless steel 316 Ti	**.P...**	PVC	**.VET...**	Stainless steel 316 Ti E-TFE-coated	**.TET...**	Titanium Grade 2 E-TFE-coated
	.T...	Titanium Grade 2	**.PP...**	Polypropylene				
	.HB...	Hastelloy B	**.PF...**	PVDF	**.VED...**	Stainless steel 316 Ti PFA-coated	**.TED...**	Titanium Grade 2 PFA-coated
	.HC...	Hastelloy C	**.TF...**	PTFE				
	.CF...	CF340	**.G...**	Borosilicate glass	**.VEC...**	Stainless steel 316 Ti E-CTFE-coated	**.TEC...**	Titanium Grade 2 E-CTFE-coated

9 — Approvals

...	**Ex**	Ex-Design	**GL**	Germanischer Lloyd	**DNV**	Det Norske Veritas

Ordering examples

	Basic type		Connection size		Option Level sensor		Distance centre-to-centre		Material Chamber dimensions		Magnetic Roller display		Option Magnetic switch		Float design		Certificates
Code	1	-	2	-	3	-	4	-	5	-	6	-	7	-	8	-	9
	BNA	-	10 / 6 / C	-	MG	-	M1500	-	V60x2	-	MRA / SK	-	3 / M / 2	-	ZVSS250	-	

1015-2

Type: BNA - ../.. - M.... - V42x2 - MRA

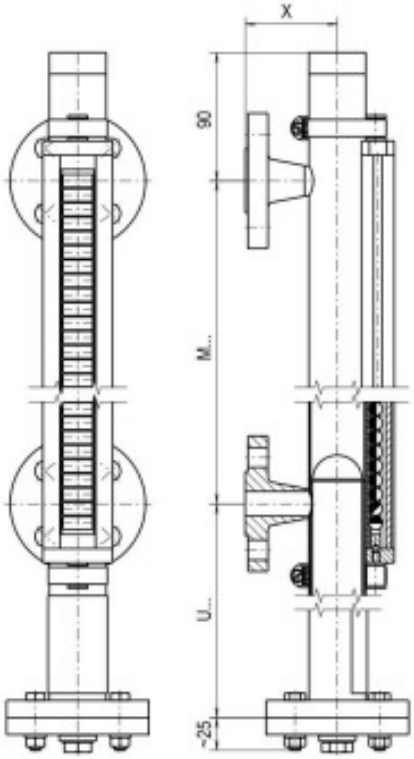

M = Centre-to-centre process connection
U = Length of float - 30 (min. 125 mm)
X = Dep. on process connection

Float type ZBS35/...

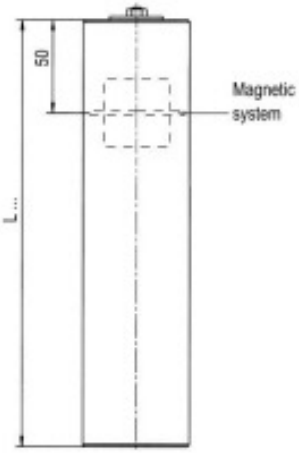

Float type ZTS35/...

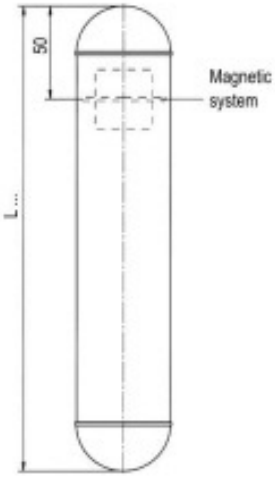

Technical data

Chamber	OD 42 x 2 mm
Chamber end top	Welding cap Options: (see page 32) - Vent plug BSP1/2" - Vent valve - Vent flange
Chamber end bottom	Flanged with drain plug BSP1/2" Options: (see page 32) - Drain valve - Drain flange
Process connection	side-side (Options see page 33) Flanges DN10 - DN25, PN6, DIN 2631 DN10 - DN25, PN16, DIN 2633 DN10 - DN25, PN40, DIN 2635 DN32 - DN100, DIN 2527 ½" - 4", ANSI B 16.5 Class 150 or Class 300 Thread or welding stubs GM/... = thread female / size GN/... = thread male / size S... = welding stubs / OD
Distance centre-to-centre M...	min. 150 mm to max. 2000 mm
Material	Stainless steel 316 Ti (1.4571)
Nominal pressure	max. 16 bar (according to float design)
Temperature range	max. 150°C (according to float design)
Float	Type ZTS35/185 Material: Titanium Grade 2 S.G.: min. 800 kg/m³ Pressure: max. 16 bar Temperature: max. 150°C Type ZBS35/120 Material: Buna S.G.: min. 800 kg/m³ Pressure: max. 6 bar Temperature: max. 80°C
Magnetic roller display	Type MRA-M... for technical data and further designs and options see page 22 and 23
Further options:	
Magnetic switches	see page 24, 25, 26 and 27
Level sensors	see page 28, 29, 30 and 31

KSR Magnetic Level Indicators / Gauges
PN6 - PN40

KSR KUEBLER

Type: BNA - ../.. - M.... - V..x.. - MRA (-Ex)

Type code Ex only:

Ⓔx II 1/2G c T1-T6 KEMA 02 ATEX 2106 X

CE Pressure Equipment Directive 97/23/EC

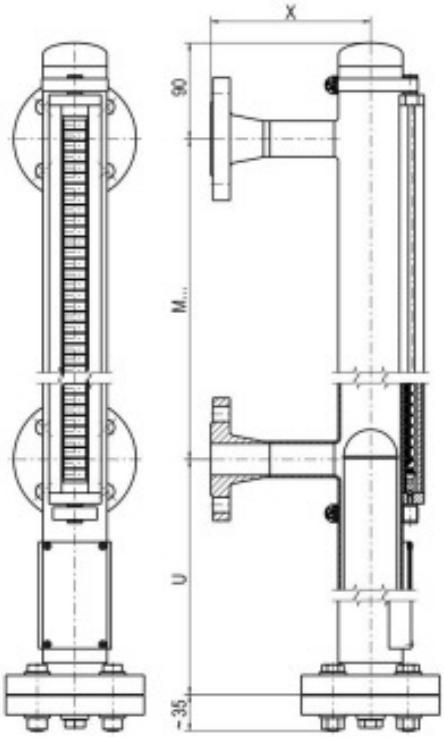

M = Centre-to-centre process connection
U = Length of float (min. 200 mm)
X = Dep. on process connection

Technical data

Chamber	OD 60.3 x 2 mm or OD 64 x 2 mm
Chamber end top	Welding cap or flat top or flanged Options: (see page 32) - Vent plug BSP1/2" - Vent valve - Vent flange
Chamber end bottom	Flanged with drain plug BSP1/2" Options: (see page 32) - Drain valve - Drain flange
Process connection	side-side (Options see page 33) Flanges DN10 - DN25, PN6, DIN 2631 DN10 - DN25, PN16, DIN 2633 DN10 - DN25, PN40, DIN 2635 DN32 - DN100, DIN 2527 ½" - 4", ANSI B 16.5 Class 150 or Class 300
	Thread or welding stubs GM/... = thread female / size GN/... = thread male / size S... = welding stubs / OD
Distance centre-to-centre M...	min. 150 mm to max. 6000 mm (other dimensions on request)
Material	Stainless steel (316 Ti, 316 L, 904 L) Titanium Grade 2 Hastelloy C Hastelloy B
Nominal pressure	max. 40 bar (according to flange design)
Temperature range	-160°C to +450°C (according to design)
Ex - Design	Temperature class / Max. operating temperature T1 320°C T2 240°C T3 160°C T4 108°C T5 80°C T6 68°C
Float	Type Z.SS... P = < 16 bar (Titanium Grade 2) P = < 20 bar (Stainless steel 316 Ti) Length of float depending on S.G. technical data (see page 18)
	Type Z.S /.../.../.../.../... Float design according to process parameters S.G., pressure and temperature (see type code page 19)
Magnetic roller display	Type MRA-M... < 200°C Type MRK-M... > 200°C for technical data and further designs and options see page 22 and 23
Further options:	
Magnetic switches	see page 24, 25, 26 and 27
Level sensors	see page 28, 29, 30 and 31
Electrical trace heating	on request
Chamber insulation	on request

1015-2

KSR Magnetic Level Indicators / Gauges
PN64, PN100

KSR KUEBLER

Type: BNA - ../.. - M.... - V..x.. - MRA (-Ex)

Type code Ex only:

Ⓔx II 1/2G c T1-T6 KEMA 02 ATEX 2106 X

CE Pressure Equipment Directive 97/23/EC

PN64 **PN100**

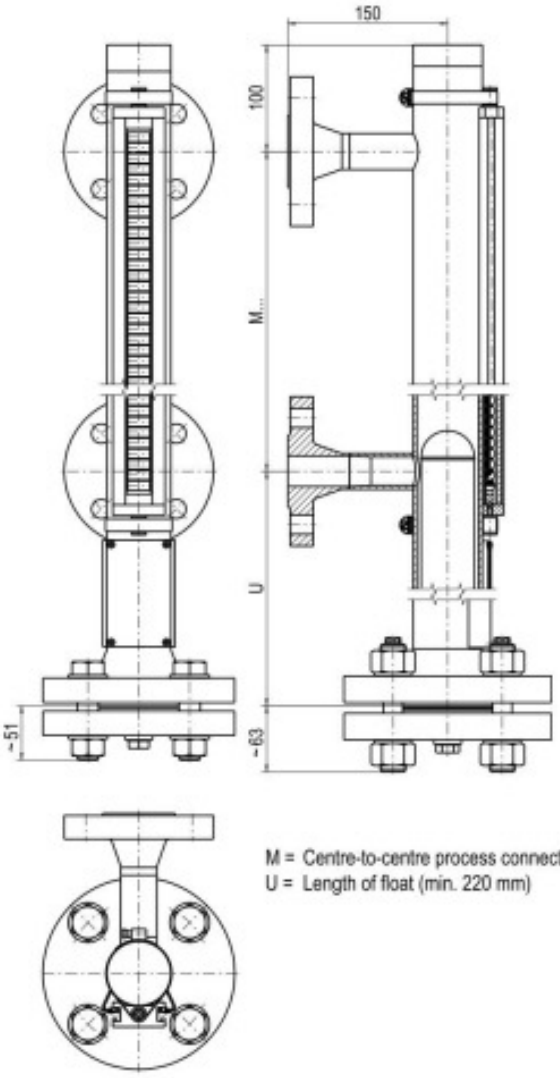

M = Centre-to-centre process connection
U = Length of float (min. 220 mm)

Technical data

Chamber	PN64 PN100	OD 60.3 x 2 mm or OD 60.3 x 2.6 mm OD 65 x 3.5 mm
Chamber end top		Welding cap or flat top or flanged
	PN64 PN100	DN50 PN64 or ANSI 2", Class 600 DN50 PN100 or ANSI 2", Class 600
		Options: (see page 32) - Vent plug BSP1/2" - Vent valve - Vent flange
Chamber end bottom		Flanged
	PN64 PN100	DN50 PN64 or ANSI 2", Class 600 DN50 PN100 or ANSI 2", Class 600 with drain plug BSP1/2"
		Options: (see page 32) - Drain valve - Drain flange
Process connection		side-side (Options see page 33)
		Flanges DN10 - DN25, PN100, DIN 2637 DN10 - DN25, DIN 2527 ½" - 3", ANSI B 16.5, Class 600
		Thread or welding stubs GM/... = thread female / size GN/... = thread male / size S... = welding stubs / OD
Distance centre-to-centre M...		min. 150 mm to max. 6000 mm (other dimensions on request)
Material		Stainless steel 316 Ti (1.4571)
Nominal pressure	PN64 PN100	max. 64 bar max. 100 bar
Temperature range		-30°C to +300°C (according to design)
Ex - Design		Temperature class / Max. operating temperature T1 320°C T2 240°C T3 160°C T4 108°C T5 80°C T6 68°C
Float		Type Z.S /.../.../.../.../...
		Float design according to process parameters S.G., pressure and temperature (see type code page 19)
Magnetic roller display		Type MRA-M... < 200°C Type MRK-M... > 200°C
		for technical data and further designs and options see page 22 and 23

Further options:

Magnetic switches	see page 24, 25, 26 and 27
Level sensors	see page 28, 29, 30 and 31
Electrical trace heating	on request
Chamber insulation	on request

KSR Magnetic Level Indicators / Gauges PN160, PN250

KSR KUEBLER

Type: BNA - ../.. - M.... - V..x.. - MRA

CE Pressure Equipment Directive 97/23/EC

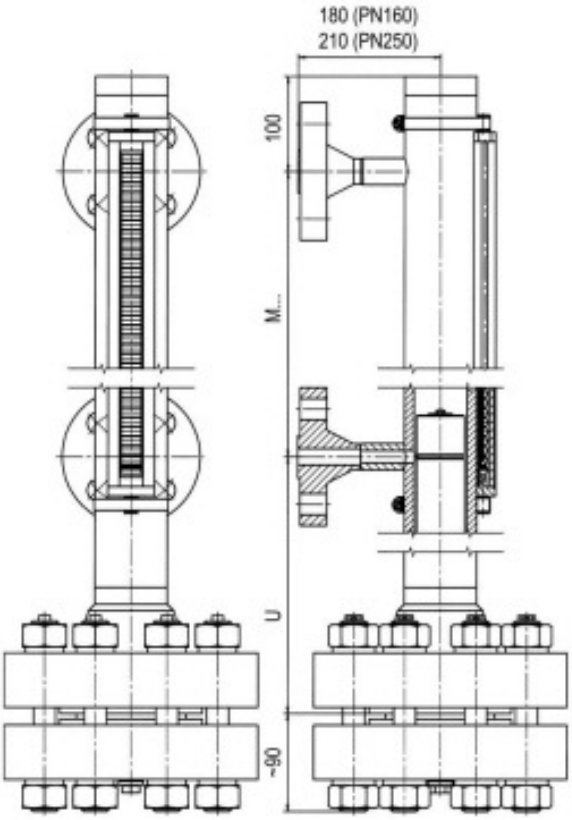

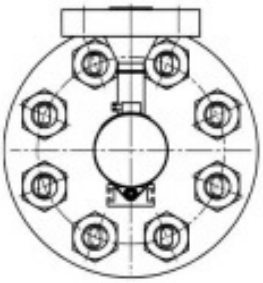

M = Centre-to-centre process connection
U = Length of float (min. 220 mm)

Technical data

Chamber	PN160 PN250	OD 73.03 x 5.16 mm OD 71 x 7.5 mm
Chamber end top		Flat top or flanged ANSI 2½", Class 1500 Options: (see page 32) - Vent plug BSP1/2" - Vent valve - Vent flange
Chamber end bottom		Flanged ANSI 2½", Class 1500 with drain plug BSP1/2" Options: (see page 32) - Drain valve - Drain flange
Process connection		side-side (Options see page 33) Flanges
	PN160 PN250	DN10 - DN25, DN 2638 DN10 - DN25, DN 2628 DN10 - DN50, DN 2527 ½" - 2½", ANSI B 16.5, Class 1500
		Thread or welding stubs GM/... = thread female / size GN/... = thread male / size S... = welding stubs / OD
Distance centre-to-centre M...		min. 150 mm to max. 6000 mm (other dimensions on request)
Material		Stainless steel 316 Ti (1.4571)
Nominal pressure	PN160 PN250	max. 160 bar max. 250 bar
Temperature range	PN160 PN250	-30°C to +285°C -30°C to +200°C (according to design)
Float		Type Z.S /.../.../.../.../... Float design according to process parameters S.G., pressure and temperature (see type code page 19)
		Type ZCFS... Solid body material, leakage-proof (see type code page 19)
Magnetic roller display		Type MRA-M... < 200°C Type MRK-M... > 200°C for technical data and further designs and options see page 22 and 23
Further options:		
Magnetic switches		see page 24, 25, 26 and 27
Level sensors		see page 28, 29, 30 and 31
Electrical trace heating		on request
Chamber insulation		on request

1015-2

KSR Magnetic Level Indicators / Gauges PN400

KSR KUEBLER

Type: BNA - ../.. - M.... - V76x10 - MRA

CE Pressure Equipment Directive 97/23/EC

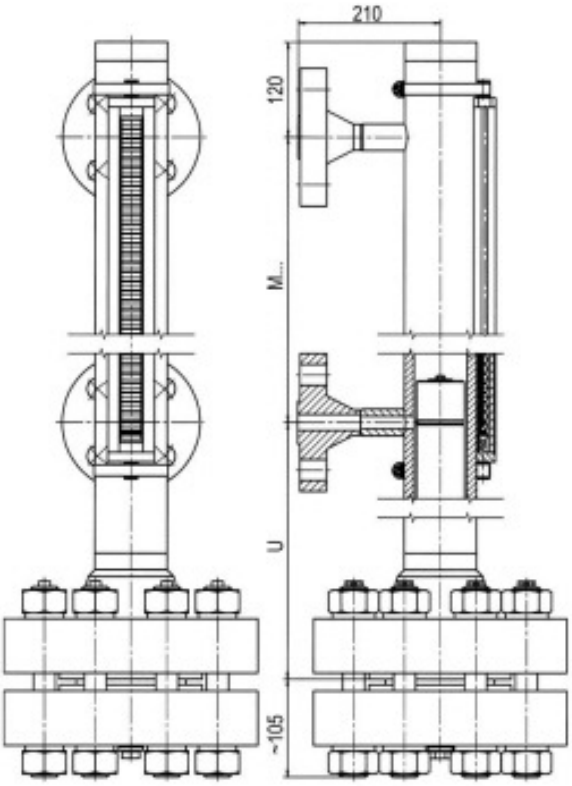

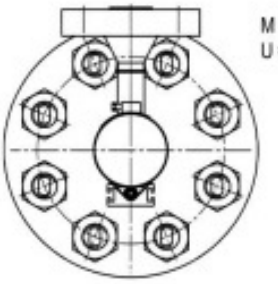

M = Centre-to-centre process connection
U = Length of float (min. 220 mm)

Technical data

Chamber	OD 76 (OD 76.1) x 10 mm
Chamber end top	Flat top or flanged ANSI 2½", Class 2500 Options: (see page 32) - Vent plug BSP1/2" - Vent valve - Vent flange
Chamber end bottom	Flanged ANSI 2½", Class 2500 with drain plug BSP1/2" Options: (see page 32) - Drain valve - Drain flange
Process connection	side-side (Options see page 33) Flanges DN10 - DN15, PN400, DIN 2627 DN10 - DN50, DIN 2527 ½" - 2½", ANSI B 16.5, Class 2500 Thread or welding stubs GM/... = thread female / size GN/... = thread male / size S... = welding stubs / OD
Distance centre-to-centre M...	min. 150 mm to max. 6000 mm (other dimensions on request)
Material	Stainless steel 316 Ti (1.4571)
Nominal pressure	max. 400 bar
Temperature range	-30°C to +70°C (according to design)
Float	Type Z.S /.../.../.../.../... Float design according to process parameters S.G., pressure and temperature (see type code page 19) Type ZCFS... Solid body material, leckage-proof (see type code page 19)
Magnetic roller display	Type MRA-M... for technical data and further designs and options see page 22 and 23
Further options:	
Magnetic switches	see page 24, 25, 26 and 27
Level sensors	see page 28, 29, 30 and 31
Electrical trace heating	on request
Chamber insulation	on request

KSR Magnetic Level Indicators / Gauges with heating jacket

KSR KUEBLER

Type: BNA - ../.. - M.... - V60/70 - MRA (-Ex)

Type code Ex only:

Ⓔx II 1/2G c T1-T6 KEMA 02 ATEX 2106 X

CE **Pressure Equipment Directive 97/23/EC**

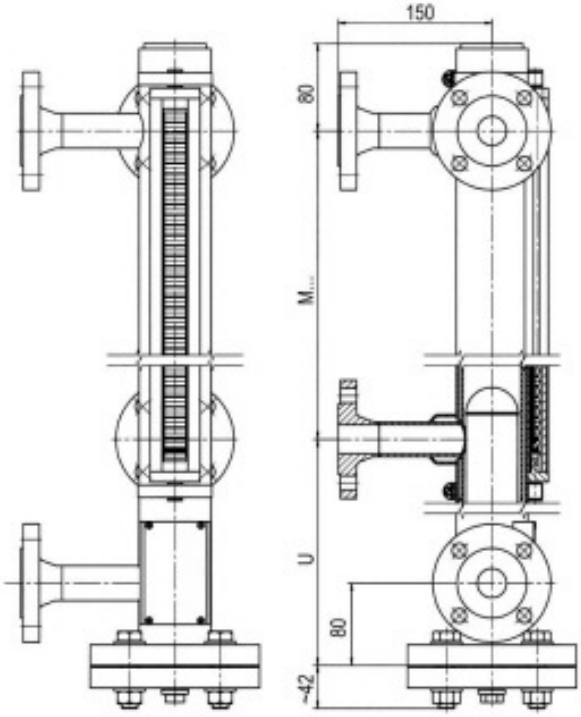

Process connection

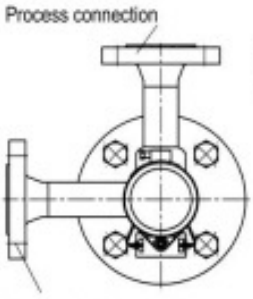

M = Centre-to-centre process connection
U = Length of float (min. 200 mm)

Heating jacket connection

Technical data

Chamber	OD 60,3 x 2 mm
Heating jacket pipe	OD 70 x 2 mm
Chamber end top	Welding cap Options: (see page 32) - Vent plug BSP1/2" - Vent valve - Vent flange
Chamber end bottom	Flanged with drain plug BSP1/2" Options: (see page 32) - Drain valve - Drain flange
Process- and heating jacket connections	side-side (Options see page 33) Flanges DN10 - DN25, PN6, DIN 2631 DN10 - DN25, PN16, DIN 2633 DN32 - DN100, DIN 2527 ½" - 4", ANSI B 16.5, Class 150
Process connection options	Flanged DN10 - DN25, PN40, DIN 2635 ½" - 4", ANSI B 16.5, Class 300 Thread or welding stubs GM/... = thread female / size GN/... = thread male / size S... = welding stubs / OD
Distance centre-to-centre M...	min. 150 mm to max. 6000 mm (other dimensions on request)
Material	Stainless steel 316 Ti (1.4571)
Nominal pressure Process	max. 16 bar or max. 40 bar (according to flange design)
Heating jacket	max. 16 bar
Temperature range	-60°C to +450°C (according to design)

Ex - Design	Temperature class	Max. operating temperature
	T1	320°C
	T2	240°C
	T3	160°C
	T4	108°C
	T5	80°C
	T6	68°C

Float	Type Z.S /.../.../.../.../... Float design according to process parameters S.G., pressure and temperature (see type code page 19)
Magnetic roller display	Type MRA-M... < 200°C Type MRK-M... > 200°C for technical data and further designs and options see page 22 and 23
Further options:	
Magnetic switches	see page 24, 25, 26 and 27
Level sensors	see page 28, 29, 30 and 31

KSR Magnetic Level Indicators / Gauges
liquid gas design

KSR KUEBLER

Type: BNA - ../.. - M.... - V88x2 - MRA

CE Pressure Equipment Directive 97/23/EC

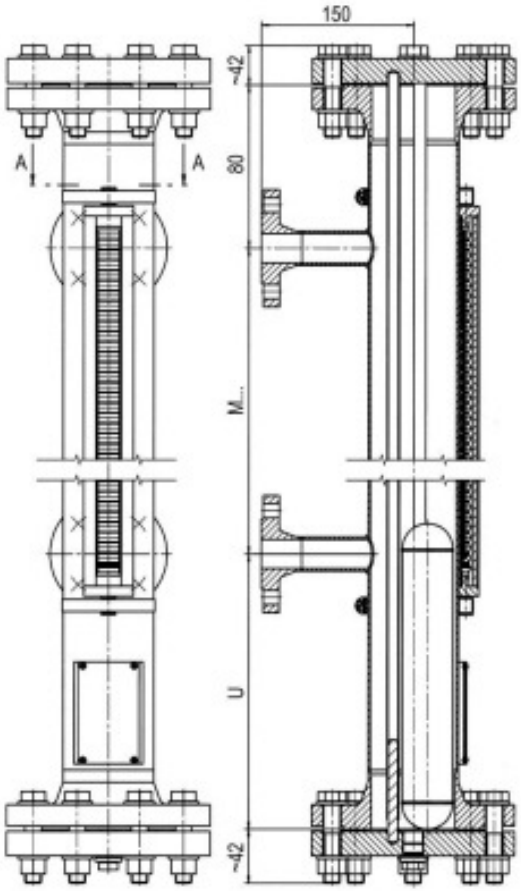

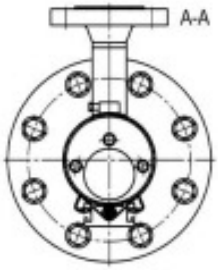

M = Centre-to-centre process connection
U = Length of float (min. 220 mm)

Technical data

Chamber	OD 88.9 x 2 mm
Chamber end top	Flanged DN80 Options: (see page 32) - Vent plug BSP1/2" - Vent valve - Vent flange
Chamber end bottom	Flanged DN80 with drain plug BSP1/2" Options: (see page 32) - Drain valve - Drain flange
Process connection	side-side (Options see page 33) Flanges DN10 - DN25, PN16, DIN 2633 DN10 - DN25, PN40, DIN 2635 DN10 - DN100, DIN 2527 ½" - 4", ANSI B 16.5 Class 150 or Class 300 Thread or welding stubs GM/... = thread female / size GN/... = thread male / size S... = welding stubs / OD
Distance centre-to-centre M...	min. 150 mm to max. 6000 mm
Material	Stainless steel 316 Ti (1.4571)
Nominal pressure	max. 25 bar (according to flange design)
Temperature range	-60°C to +300°C (according to design)
Float	Type Z.S /.../.../.../.../... Float design according to process parameters S.G., pressure and temperature (see type code page 19)
Magnetic roller display	Type MRA-M... < 200°C Type MRK-M... > 200°C for technical data and further designs and options see page 22 and 23

Further options:

Magnetic switches	see page 24, 25, 26 and 27
Level sensors	see page 28, 29, 30 and 31
Electrical trace heating	on request
Chamber insulation	on request

1015-2

KSR Magnetic Level Indicators / Gauges
E-CTFE-coated

KSR KUEBLER

Type: BNA - ../16 - M.... - VEC64x2 - MRA

CE Pressure Equipment Directive 97/23/EC

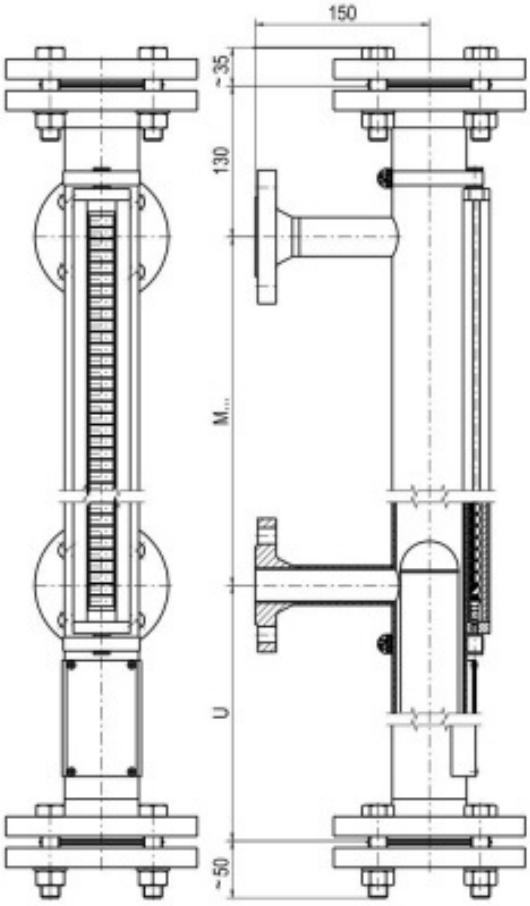

M = Centre-to-centre process connection
U = Length of float (min. 220 mm)

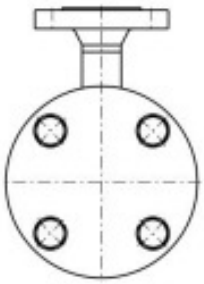

Technical data

Chamber	OD 64 x 2 mm
Chamber end top	Flanged Options: (see page 32) - Vent flange
Chamber end bottom	Flanged Options: (see page 32) - Drain flange
Process connection	side-side Flanges DN25, PN16, DIN 2633 DN32 - DN100, DIN 2527 1" - 4", ANSI B 16.5, Class 150
Distance centre-to-centre M...	min. 150 mm to max. ... mm (overall chamber length max. 4000 mm) on dimensions > 4000 mm - chamber separated with flange
Material	Stainless steel 316 Ti (1.4571) coated E-CTFE internally Option: anti-static
Nominal pressure	max. 16 bar
Temperature range	dep. on liquid
Float	Type Z.ECS.../.../.../.../B152 .V... = Material Stainless steel 316 Ti E-CTFE-coated .T... = Material Titanium Grade 2 E-CTFE-coated Float design according to process parameters S.G., pressure and temperature (see type code page 19)
Magnetic roller display	Type MRA-M... for technical data and further designs and options see page 22 and 23
Further options:	
Magnetic switches	see page 24, 25, 26 and 27
Level sensors	see page 28, 29, 30 and 31
Electrical trace heating	on request
Chamber insulation	on request

1015-2

KSR Magnetic Level Indicators / Gauges
E-TFE-coated

KSR KUEBLER

Type: BNA - ../16 - M.... - VET70x2 - MRA

CE Pressure Equipment Directive 97/23/EC

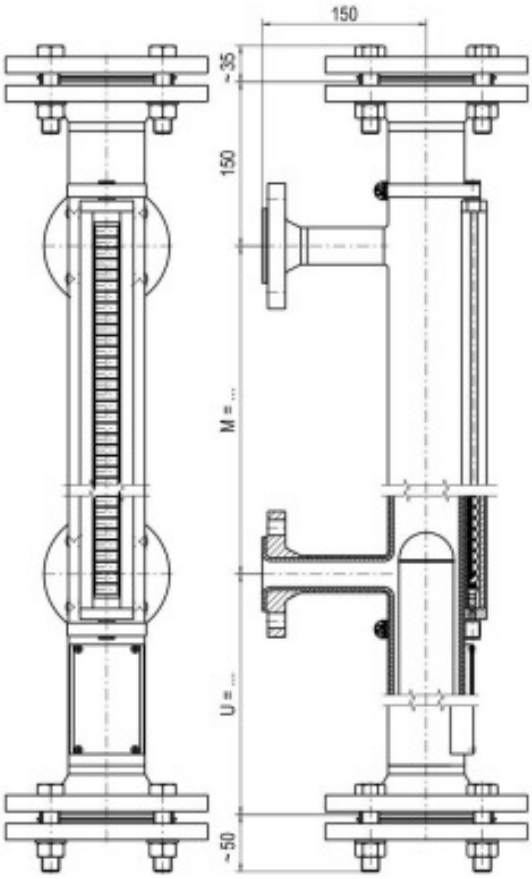

M = Centre-to-centre process connection
U = Length of float (min. 220 mm)

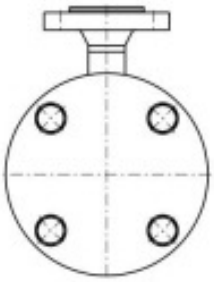

Technical data

Chamber	OD 70 x 2 mm
Chamber end top	Flanged DN65 PN16 or ANSI 2½", Class 150 Options: (see page 32) - Vent flange
Chamber end bottom	Flanged DN65 PN16 or ANSI 2½", Class 150 Options: (see page 32) - Drain flange
Process connection	side-side Flanges DN25, PN16, DIN 2633 DN32 - DN100, DIN 2527 1" - 4", ANSI B 16.5, Class 150
Distance centre-to-centre M...	min. 150 mm to max. ... mm (overall chamber length max. 2900 mm) on dimensions > 2900 mm - chamber separated with flange
Material	Stainless steel 316 Ti (1.4571) coated E-TFE internally 3 - 4 mm
Nominal pressure	max. 16 bar
Temperature range	depending on liquid
Float	Type Z.ECS.../.../.../.../B104 .V... = Material Stainless steel 316 Ti E-CTFE-coated .T... = Material Titanium Grade 2 E-CTFE-coated Type Z.EDS.../.../.../.../B104 .V... = Material Stainless steel 316 Ti PFA-coated .T... = Material Titanium Grade 2 PFA-coated Float design according to process parameters S.G., pressure and temperature (see type code page 19)
Magnetic roller display	Type MRA-M... for technical data and further designs and options see page 22 and 23
Further options:	
Magnetic switches	see page 24, 25, 26 and 27
Level sensors	see page 28, 29, 30 and 31
Electrical trace heating	on request
Chamber insulation	on request

1015-2

KSR Magnetic Level Indicators / Gauges
PTFE-lined

KSR KUEBLER

Type: BNA - ../16 - M.... - VTF70x2 - MRA

CE Pressure Equipment Directive 97/23/EC

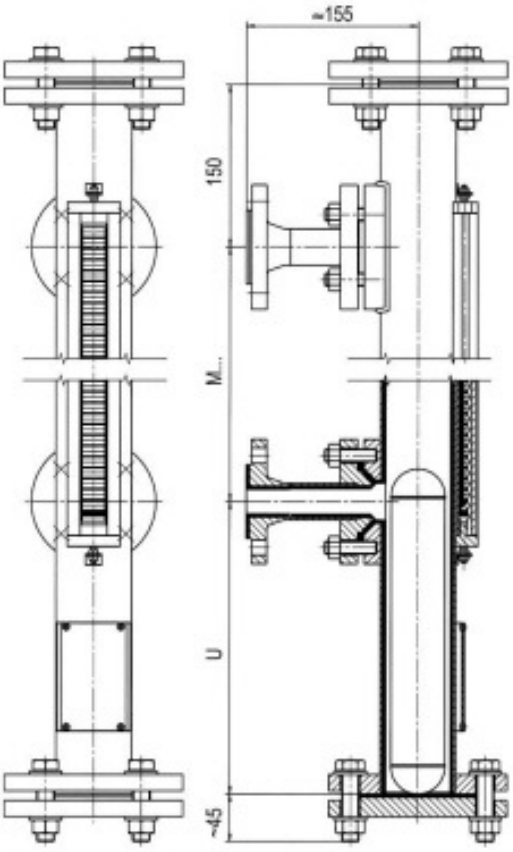

M = Centre-to-centre process connection
U = Length of float (min. 220 mm)

Technical data

Chamber	OD 70 x 2 mm
Chamber end top	Flanged Options: (see page 32) - Vent flange
Chamber end bottom	Flanged Options: (see page 32) - Drain flange
Process connection	side-side Flanged DN25, PN16, DIN 2633 with reducing flanges DN32 - DN100, PN10, DIN 2848 / 2874
Distance centre-to-centre M...	min. 150 mm to max. ... mm (overall chamber length max. 4000 mm) on dimensions > 4000 mm - chamber separated with flange
Material	Stainless steel 316 Ti (1.4571) coated PTFE internally Lining 3 mm wall thickness, vacuum-proof Option: anti-static
Nominal pressure	max. 10 bar
Temperature range	depending on liquid
Float	Type Z.ECS.../.../.../.../B104 .V... = Material Stainless steel 316 Ti E-CTFE-coated .T... = Material Titanium Grade 2 E-CTFE-coated Type Z.EDS.../.../.../.../B104 .V... = Material Stainless steel 316 Ti PFA-coated .T... = Material Titanium Grade 2 PFA-coated Float design according to process parameters S.G., pressure and temperature (see type code page 19)
Magnetic roller display	Type MRA-M... for technical data and further designs and options see page 22 and 23
Further options:	
Magnetic switches	see page 24, 25, 26 and 27
Level sensors	see page 28, 29, 30 and 31
Electrical trace heating	on request
Chamber insulation	on request

KSR Magnetic Level Indicators / Gauges
PVDF, PP, PVC

KSR KUEBLER

Type: BNA - ../16 - M.... - PF63x3 - MRA
Type: BNA - ../16 - M.... - PP63x3 - MRA
Type: BNA - ../16 - M.... - P63x3 - MRA

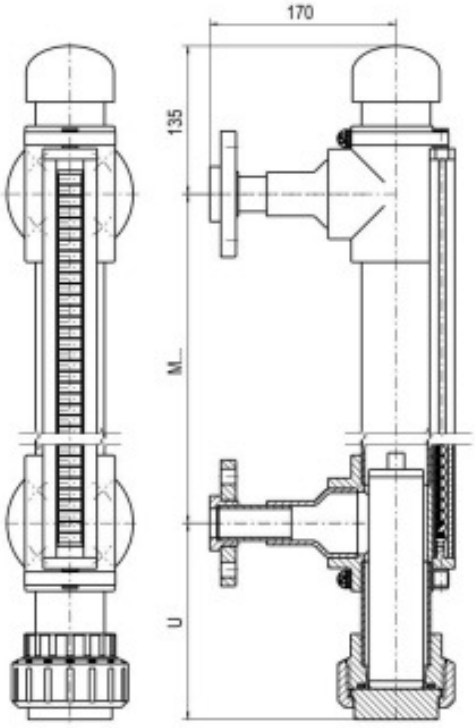

M = Centre-to-centre process connection
U = Length of float (min. 155 mm)

Technical data

Chamber	OD 63 x 3 mm
Chamber end top	Welding cap Options: (see page 32) - Threaded fitting - Vent valve - Vent flange
Chamber end bottom	Threaded fitting Options: (see page 32) - Drain valve - Drain flange
Process connection	side-side Flanged DN15 - DN50, PN16 Dimensions: ISO/DIN ½" - 2", ANSI B 16.5, Class 150 Dimensions: ANSI B 16.5 Material: UP - GF
Distance centre-to-centre M...	min. 200 mm to max. 4000 mm
Material	PVDF, PP or PVC-U
Nominal pressure	max. 4 bar
Temperature range	PVDF max. 80°C PP max. 60°C PVC max. 40°C
Float	Type Z..S... .PF... = Material PVDF .PP... = Material PP .P... = Material PVC-U Length of float depending on S.G. technical data see page 17
Magnetic roller display	Type MRA-M.... for technical data and further designs and options see page 22 and 23
Further options:	
Magnetic switches	see page 24, 25, 26 and 27
Level sensors	see page 28, 29, 30 and 31

1015-2

KSR Bypass Floats
PVDF, PP, PVC

KSR KUEBLER

Material	PVDF	PP	PVC
Working Temperature	+ 80 °C	+ 60 °C	+ 40 °C
Working Pressure	max. 6 bar	max. 6 bar	max. 6 bar
Test Pressure	max. 9 bar	max. 9 bar	max. 9 bar
Diameter	50 mm	50 mm	50 mm
Type Code	ZPFS...	ZPPS ...	ZPS ...

Float Length (mm)	150	200	250	300	350	150	200	250	300	350	150	200	250	300	350
Volume (cm³)	295	393	491	589	687	295	393	491	589	687	295	393	491	589	687
Weight (g)	290	335	385	435	480	260	285	310	335	360	245	265	290	310	335

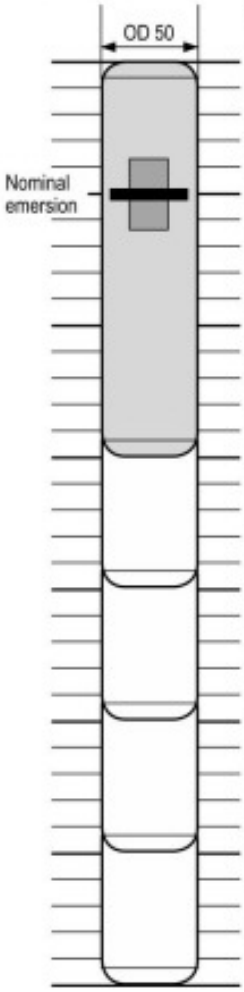

Immersion depth table in relation to specific gravity of the liquid (kg/m³)

Emersion in mm	PVDF 150	PVDF 200	PVDF 250	PVDF 300	PVDF 350	PP 150	PP 200	PP 250	PP 300	PP 350	PVC 150	PVC 200	PVC 250	PVC 300	PVC 350
0	-	-	-	-	-	-	-	-	-	-	-	-	-	-	-
10	-	-	-	-	-	-	-	-	-	-	-	-	-	-	-
20	-	-	-	-	-	-	-	-	-	-	-	-	-	-	-
30	1230	1000	890	820	760	1100	850	720	630	570	1040	790	670	580	530
40	1340	1070	930	850	790	1200	910	750	660	590	1130	840	700	610	550
50	**1480**	**1140**	**980**	**890**	**810**	**1320**	**970**	**790**	**680**	**610**	**1250**	**900**	**740**	**630**	**570**
60	1640	1220	1030	920	840	1470	1040	830	710	630	1390	960	780	660	590
70	1850	1310	1090	960	870	1660	1120	880	740	650	1560	1040	820	690	610
80	2110	1420	1150	1010	910	1890	1210	930	780	680	1780	1120	870	720	630
90	2460	1550	1230	1050	940	2210	1320	990	810	710	2080	1230	920	750	660
100	**2950**	**1710**	**1310**	**1110**	**980**	**2650**	**1450**	**1050**	**850**	**730**	**2500**	**1350**	**980**	**790**	**680**
110	-	1900	1400	1170	1020	-	1610	1130	900	760	-	1500	1050	830	710
120	-	2130	1510	1230	1060	-	1810	1210	950	800	-	1690	1140	880	740
130	-	2440	1630	1300	1110	-	2070	1320	1000	830	-	1930	1230	930	780
140	-	2840	1780	1380	1160	-	2420	1440	1070	870	-	2250	1340	990	810
150	**-**	**-**	**1960**	**1480**	**1220**	**-**	**2900**	**1580**	**1140**	**920**	**-**	**2700**	**1480**	**1050**	**850**
160		-	2180	1580	1290		-	1750	1220	960		-	1640	1130	900
170		-	2450	1700	1360		-	1970	1310	1020		-	1850	1210	950
180		-	2800	1850	1440		-	2260	1420	1080		-	2110	1320	1000
190		-	-	2010	1530		-	2630	1550	1150		-	2460	1440	1070
200		**-**	**-**	**2220**	**1630**		**-**	**-**	**1710**	**1220**		**-**	**2950**	**1580**	**1140**
210			-	2460	1750			-	1900	1310			-	1750	1220
220			-	2770	1880			-	2130	1410			-	1970	1310
230			-	-	2040			-	2440	1530			-	2260	1420
240			-	-	2220			-	2840	1670			-	2630	1550
250			**-**	**-**	**2440**			**-**	**-**	**1830**			**-**	**-**	**1710**
260				-	2720				-	2040				-	1900
270				-	-				-	2290				-	2130
280				-	-				-	2620				-	2440
290				-	-				-	-				-	2840
300				-	-				-	-				-	-
310					-					-					-
320					-					-					-
330					-					-					-
340					-					-					-
350					**-**					**-**					**-**

1015-2

KSR Bypass Floats
Stainless steel, Titanium
Design with beads

Material	Stainless steel 316 Ti (1.4571)	Titanium Grade 2 (3.7035)
Working Temperature	- 40°C to + 250°C	- 40°C to + 250°C
Working Pressure	max. 20 bar	max. 16 bar
Test Pressure	max. 30 bar	max. 20 bar
Diameter	50 mm	50 mm
Type Code	**ZVSS ...**	**ZTSS ...**

Float Length (mm)	**150**	**200**	**250**	**300**	**350**	**400**	**450**	150	200	250	300	350	400	450
Volume (cm³)	262	360	458	556	654	753	851	262	360	458	556	654	753	851
Weight (g)	256	300	332	368	415	455	485	169	240	265	287	312	342	368

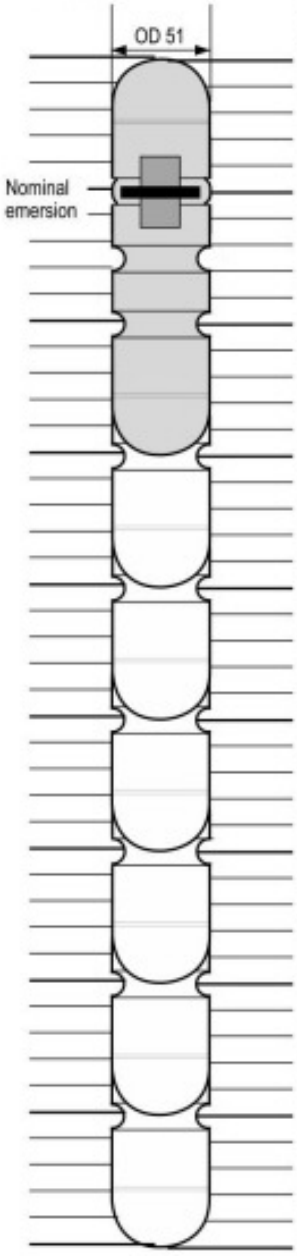

Immersion depth table in relation to specific gravity of the liquid (kg/m³)

Emersion in mm														
0	-	-	-	-	-	-	-	-	-	-	-	-	-	-
10	-	-	-	-	-	-	-	-	-	-	-	-	-	-
20	-	-	-	-	-	-	-	-	-	-	-	-	-	-
30	1170	950	800	720	680	640	600	770	760	640	560	510	480	460
40	1280	1010	840	740	700	660	610	850	810	670	580	530	500	470
50	**1420**	**1080**	**880**	**780**	**720**	**680**	**630**	**940**	**860**	**700**	**600**	**540**	**510**	**480**
60	1600	1160	930	810	750	700	650	1050	930	740	630	560	530	490
70	1820	1260	980	850	780	720	660	1200	1000	790	660	580	540	500
80	2110	1370	1050	890	810	740	680	1400	1090	830	690	610	560	520
90	2520	1500	1110	930	840	770	700	1670	1200	890	720	630	580	530
100	**-**	**1670**	**1190**	**980**	**870**	**790**	**720**	**2070**	**1330**	**950**	**760**	**660**	**600**	**550**
110	-	1870	1280	1030	910	820	740	2720	1500	1030	800	690	620	570
120	-	2130	1390	1090	950	850	770	-	1710	1110	850	720	640	580
130	-	2480	1510	1160	1000	890	790	-	1980	1210	900	750	670	600
140	-	2960	1660	1240	1050	920	820	-	2370	1330	960	790	690	620
150	**-**	**-**	**1840**	**1320**	**1100**	**960**	**850**	**-**	**2930**	**1470**	**1030**	**830**	**720**	**640**
160		-	2070	1420	1160	1000	880		-	1650	1110	870	750	670
170		-	2360	1540	1230	1050	910		-	1880	1200	930	790	690
180		-	2740	1680	1310	1090	940		-	2190	1310	980	820	720
190		-	-	1840	1390	1150	980		-	2610	1440	1050	860	740
200		**-**	**-**	**2040**	**1490**	**1210**	**1020**		**-**	**-**	**1590**	**1120**	**910**	**780**
210			-	2290	1610	1280	1070			-	1790	1210	960	810
220			-	2620	1740	1350	1110			-	2040	1310	1010	850
230			-	-	1890	1430	1170			-	2370	1420	1080	890
240			-	-	2080	1530	1220			-	2830	1560	1150	930
250			**-**	**-**	**2310**	**1640**	**1290**			**-**	**-**	**1730**	**1230**	**980**
260				-	2590	1760	1360				-	1950	1320	1030
270				-	2950	1900	1440				-	2220	1430	1090
280				-	-	2080	1530				-	2580	1560	1160
290				-	-	2280	1630				-	-	1710	1240
300				**-**	**-**	**2530**	**1740**				**-**	**-**	**1900**	**1320**
310					-	2840	1880					-	2130	1420
320					-	-	2030					-	2430	1540
330					-	-	2210					-	2820	1680
340					-	-	2430					-	-	1840
350					**-**	**-**	**2690**					**-**	**-**	**2040**
360						-	-						-	2290
370						-	-						-	2620
380						-	-						-	-
390						-	-						-	-
400						-	-						-	-
410							-							-
420							-							-
430							-							-
440							-							-
450							-							-

1015-2

KSR Bypass Floats

High pressure design

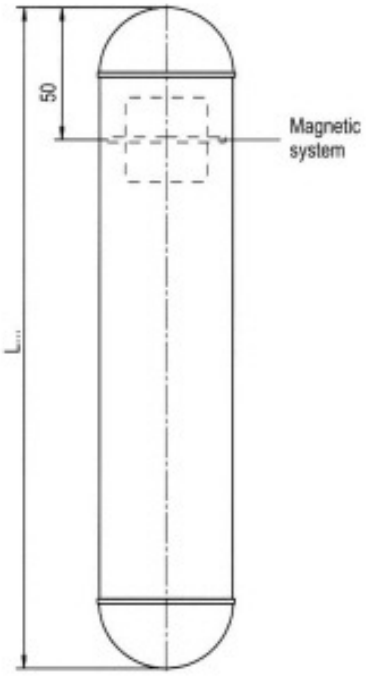

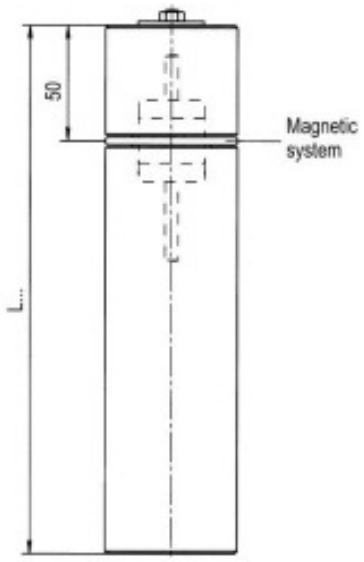

Type Z...S/.../.../.../.../...

Material	Stainless steel 316 Ti (1.4571)
Options	E-CTFE-, E-TFE- or PFA-coated
Material	Titanium Grade 2
Options	E-CTFE-, E-TFE- or PFA-coated
Pressure range	Stainless steel > 20 bar to 40 bar Titanium > 16 bar to 130 bar Temperature dependent

Type code

Z..S / ... / ... / ... / ... / ...

- Magnetic system
- S.G. in kg/m³
- Temperature in °C
- Nominal pressure in bar
- Length of the float in mm
- Float material
  - .V. = Stainless steel
  - .T. = Titanium
  - ..EC. = E-CTFE-coated
  - ..ET. = E-TFE-coated
  - ..ED. = PFA-coated

Distinction between low pressure type
- straight body -

Design depending on 3 parameters
- Pressure, Temperature and S.G.-

Compression strength
- with reinforcement-discs
- sealed design -

Magnetic system (radial symmetric)
- according to pressure and temperature

Length of the float
- according to S.G. of liquid and weight of float

Type ZCFS/...

Solid body material, leakage-proof, on request

Max. nominal pressure	420 bar
Max. nominal temperature	100°C

Type code

ZCFS / ...

- Length of the float in mm

The following has to be specified in case of an order:

Max. nominal pressure (PN)	**....**	**bar**
Test pressure	**PN x 1.3** **PN x 1.5**	
Max. nominal temperature	**....**	**°C**
Min. S.G. of the liquid	**....**	**kg/m³**

KSR Top Mounted Level Indicators

KSR KUEBLER

Operating Principle

The KSR Top Mounted Level Indicator is mounted on the top of the tank by means of a suitable process connection (flange or thread). It consists of a chamber and a float with guide rod and magnetic system attached to it. As the liquid level in the tank rises or falls, the float and the magnet will move with it.

On the ‚dry side' of the chamber is the KSR Magnetic Roller Display, a column of magnetic rollers which are white on one side and red on the other. The rollers are made from plastic (MRA) or ceramics (MRK) with a distance of 10 mm between their axes. As the float moves up or down the bunched field of the permanent magnet mounted in its top section ‚pulls' the rollers through a rotation of 180°, thus changing their colour. As the float rises the rollers are turned from white to red, and as the float falls, they are changed back to white again. This means that at any given time the amount of liquid in the tank is constantly represented by a red column without any external power supply.

Technical Advantages

- Simple, robust, and solid design
- Pressure- and gas-proof separation of chamber and display
- Measuring and indicating of the level of aggressive, combustible, toxic, hot, agitated, and contaminated liquids
- KSR Magnetic Roller Displays without external power supply
- Available for applications in all areas of industry through use of highly corrosion-resistant materials
- Designs for a pressure range from full vacuum to 64 bar
- Designs for temperatures from -60°C to +300°C

Options

As options the following devices can be attached to a KSR Top Mounted Level Indicator to monitor and control the level of the liquid.

KSR Level Sensors

KSR Level Sensors are used to measure and transmit the level in conjunction with a KSR control unit. This control unit converts the resistance value of the level sensor to a proportional analogue signal.

KSR Magnetic Switches

KSR Magnetic switches are used to monitor certain limits of the level. The obtained binary signal can be forwarded to trigger alarms or other controls.

1015-2

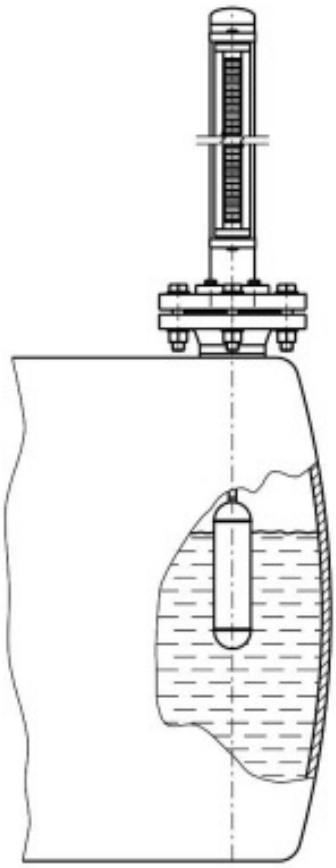

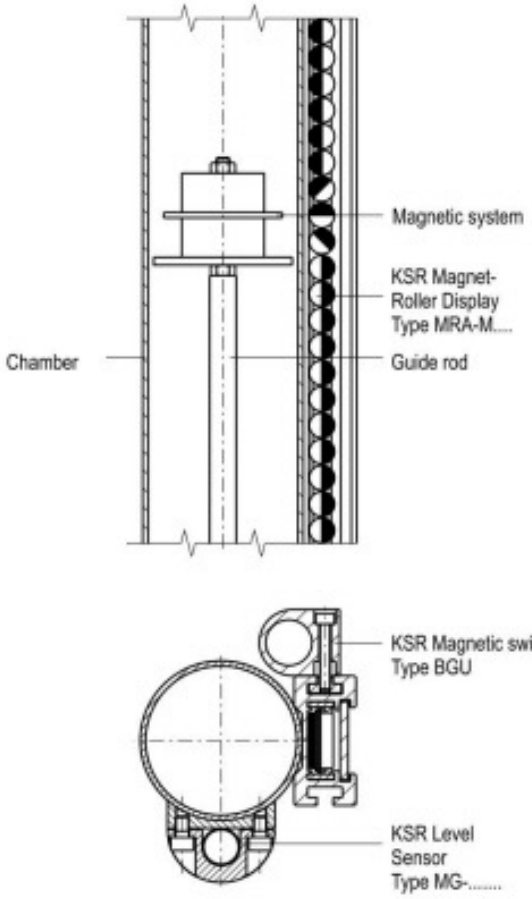

KSR KUEBLER

Type: UTN - ../.. - L..../M.... - V.. - MRA

CE Pressure Equipment Directive 97/23/EC

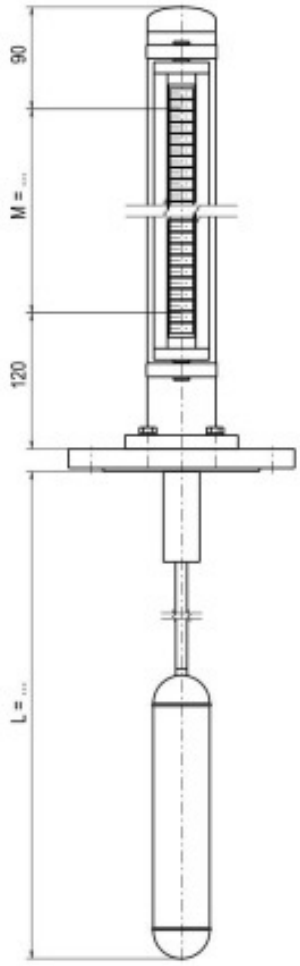

Technical data

Chamber	OD 60.3 x 2 mm or OD 60.3 x 2.6 mm
Chamber end top	Welding cap or flat top or flanged Options: (see page 32) - Vent plug BSP1/2"
Process connection	Flanges: DIN 2527 DN50 - DN250, PN6 - PN64 Flanges: ANSI B 16.5 2" - 10", Class 150 – 600 Threaded: BSP 2"
Material	
Chamber	Stainless steel 316 Ti or 316 L
Process connection	Stainless steel 316 Ti or 316 L
Guide rod	Titanium
Float	Stainless steel 316 Ti or Titanium
Nominal pressure	max. 64 bar (according to design)
Temperature range	-60°C to +300°C (according to design)
Float	Bypass floats in Stainless steel 316 Ti or Titanium OD 50 – OD 100 mm Spherical float in Stainless steel 316 Ti or Titanium OD 80 – OD 120 mm Float design according to process parameters S.G., pressure and temperature and insertion length L...
Magnetic roller display	Type MRA-M.... < 200°C Type MRK-M.... > 200°C for technical data and further designs and options see page 22 and 23
Further options:	
Magnetic switches	see page 24, 25, 26 and 27
Level sensors	see page 28, 29, 30 and 31
Electrical trace heating	on request
Chamber insulation	on request
Stilling tube or cage	on request

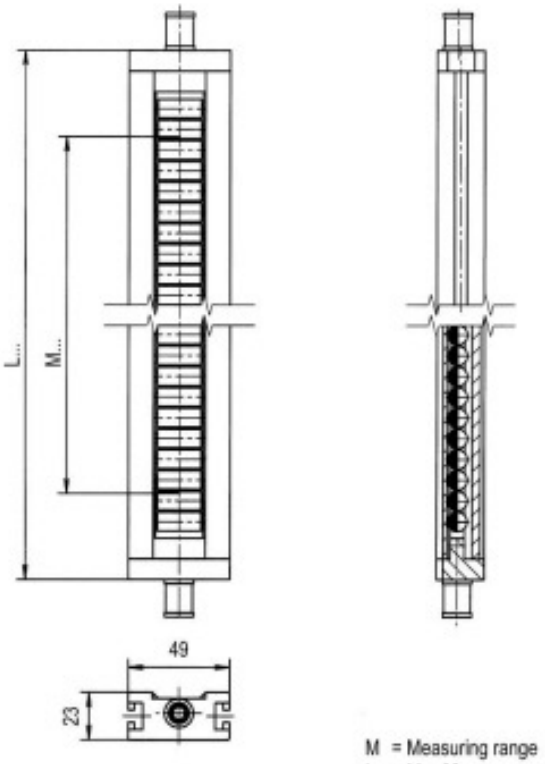

M = Measuring range
L = M + 83

Type MRA-M....
Type MRK-M....

Technical data	MRA	MRK
Housing	Aluminium anodised	
Rollers	Material Crastin PBT red and white	Material Ceramics red and white
Cover	Makrolon PC	Glass
Max. ambient temperature	200°C	450°C
Housing protection	IP65	

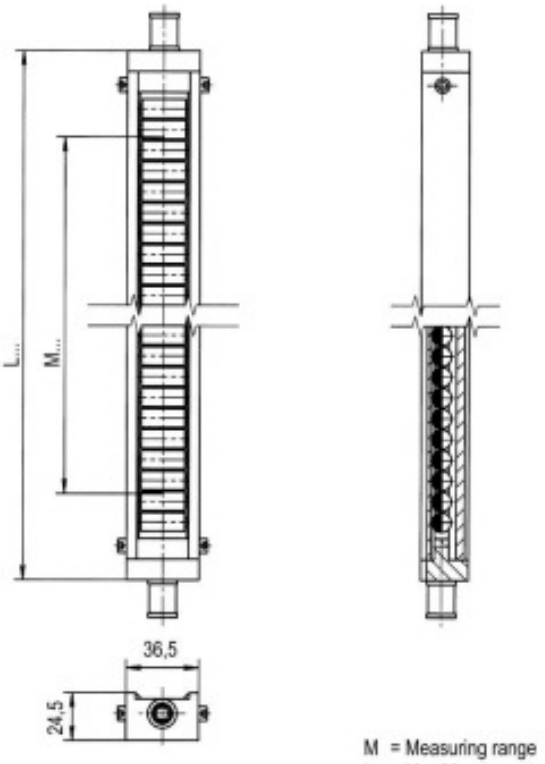

M = Measuring range
L = M + 83

Type MNAV-M....
Type MNKV-M....

Technical data	MNAV	MNKV
Housing	Aluminium Stainless steel-lined	
Rollers	Material Crastin PBT red and white	Material Ceramics red and white
Cover	Makrolon PC	Glass
Max. ambient temperature	200°C	450°C
Housing protection	IP65	

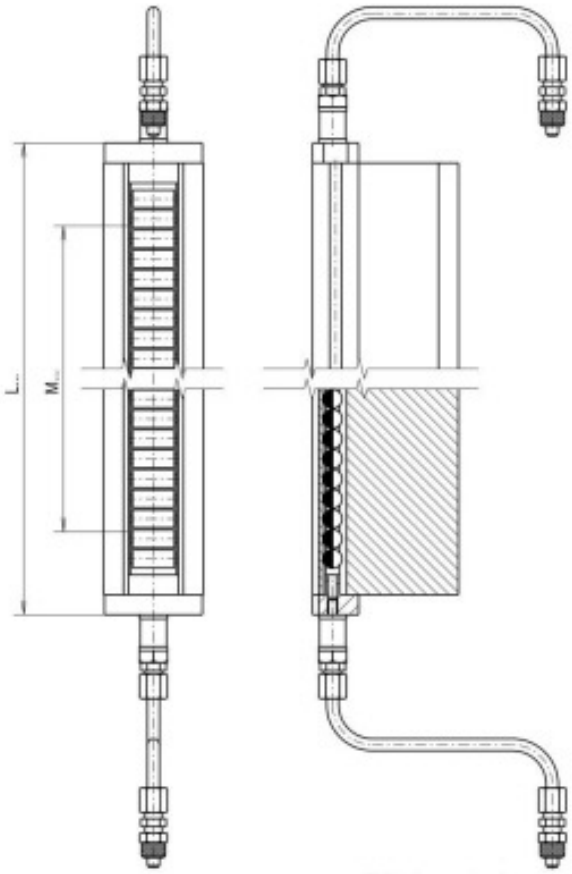

Sight glass extender

M = Measuring range
L = M + 83
I = Insulation thickness

Code adder **/P** = with sight glass extender and purge (for chamber insulations)

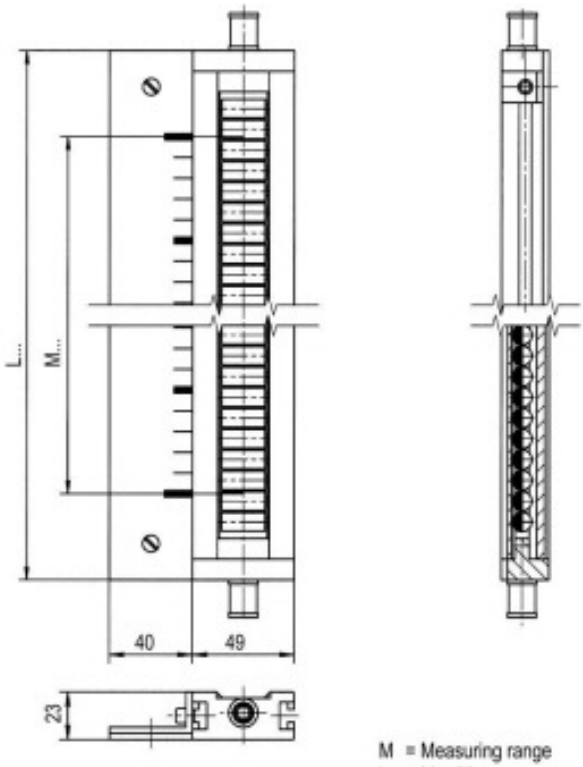

M = Measuring range
L = M + 83

Code adder **/SK** = Aluminium with adhesive foil, cm-graduation ambient temperature for the adhesive foil max.100°C

/SG = Aluminium engraved, graduation selectable

/VSG = Stainless steel engraved, graduation selectable

KSR Magnetic switches are used to monitor certain limits of the level. The obtained binary signal can be forwarded to trigger alarms or other controls.

Connection diagram

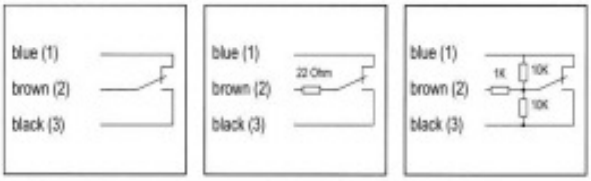

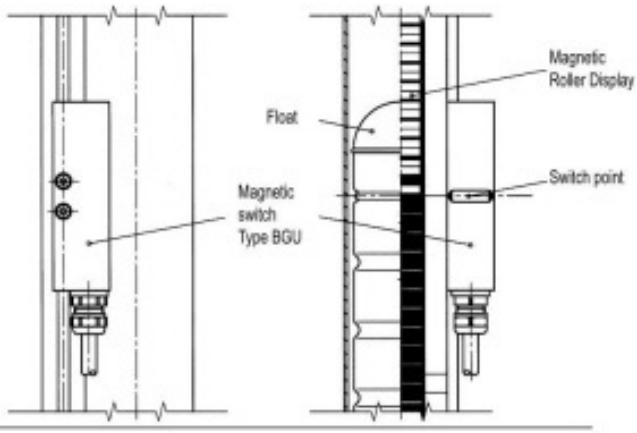

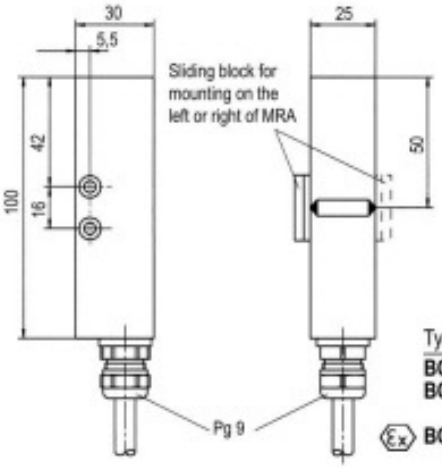

Type
BGU-1 PVC
BGU-1 Sil
Ex **BGU-E-1 PVC blue**

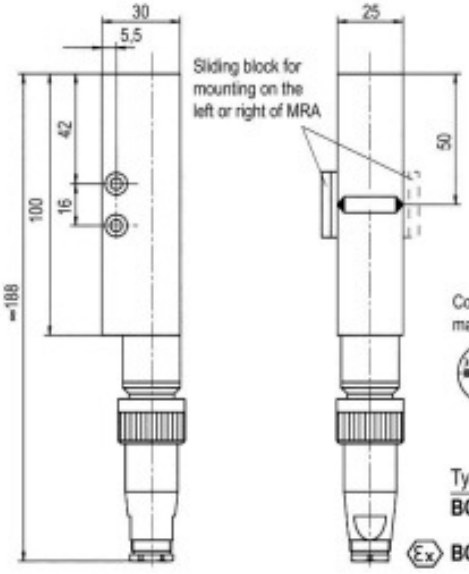

Type
BGU-S 716
Ex **BGU-E-S 716**

Code		Type
M	=	**BGU-1 PVC**
MT	=	**BGU-1 Sil**
MSt	=	**BGU-S 716**
Ex **ME**	=	**BGU-E-1 PVC blue**
MESt	=	**BGU-E-S 716**

Technical data

	Contact	Reed contact
	Contact type	1 SPDT
	Contact behaviour	bistable
	Switch rating	
Code	**M**, **MT** and **MSt**	230 V AC, 60 VA, 1 A 230 V DC, 30 W, 0.5 A
Code	**ME** and **MESt**	for use in intrinsically safe circuit only with max. 100 mA and max. 30 V
	adder **/N**	for use in control circuits to DIN EN 60947-5-6
	Max. ambient temperature	
Code	**M**	90°C
Code	**MT**	150°C
Code	**MSt**	85°C
Code	**ME** and **MESt**	T6 to 85°C
	Connection cable	3 x 0.75 mm²
Code	**M**	1 m PVC grey
Code	**MT**	1 m Silicone
Code	**ME**	1 m PVC blue
	Connection plug	
Code	**MSt** and **MESt**	
	Housing	Aluminium, anodised
	Housing protection	IP65
	Intrinsically safe (Marking)	Code **ME** and **MESt** only Ex **II 1 G EEx ia IIC T6 - T3** **LCIE 01 ATEX 6047 X**

Contact protection measures

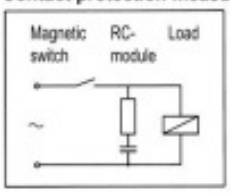

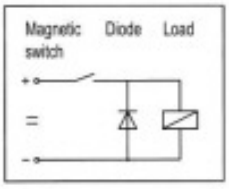

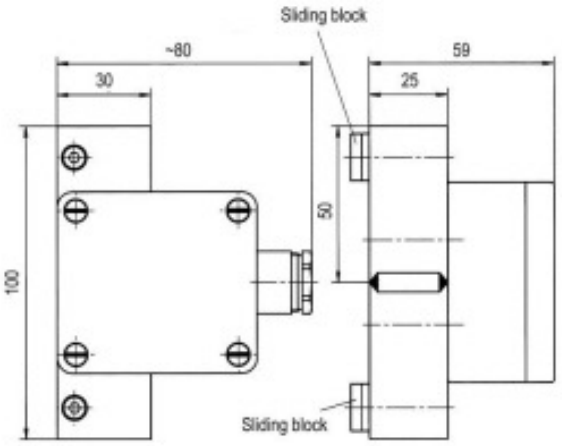

Code		Type
MA	=	**BGU-A**
Ex **MAE**	=	**BGU-A-E**

Technical data

Contact	Reed contact
Contact type	1 SPDT
Contact behaviour	bistable
Switch rating	
Code **MA**	230 V AC, 60 VA, 1 A 230 V DC, 30 W, 0.5 A
Code **MAE**	for use in intrinsically safe circuit only with max. 100 mA and max. 30 V
adder **/N**	for use in control circuits to DIN EN 60947-5-6
Max. ambient temperature	
Code **MA**	150°C
Code **MAE**	T6 to 85°C T5 to 100°C T4 to 135°C T3 to 150°C
Housing	Aluminium, anodised
Housing protection	IP65
Intrinsically safe (Marking)	Code **MAE** only Ex **II 1 G EEx ia IIC T6 - T3** **LCIE 01 ATEX 6047 X**

Contact protection measures see page 24

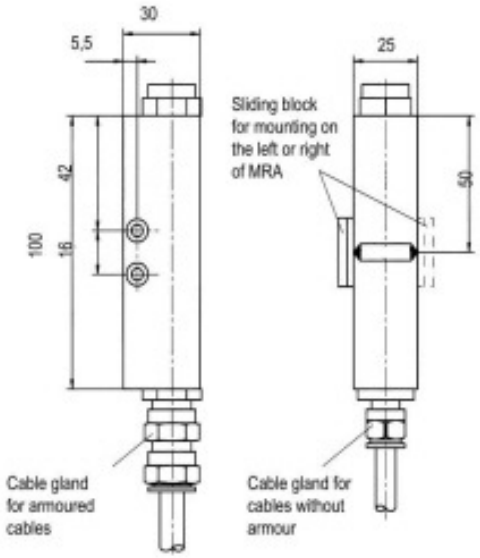

Code		Type
Ex **MD**	=	**BGU-EEx d-1 PVC**
MDG	=	**BGU-EEx d-1 PUR**
MDGA	=	**BGU-EEx d-1 PURA**
MDT	=	**BGU-EEx d-1 Sil**

Technical data

Contact	Reed contact
Contact type	1 SPDT
Contact behaviour	bistable
Switch rating	230 V AC, 60 VA, 1 A 230 V DC, 30 W, 0.5 A
adder **/N**	for use in control circuits to DIN EN 60947-5-6
Max. ambient temperature	
Code **MD**, **MDG** and **MDGA**	T6 to 85°C
Code **MDT**	T6 to 85°C T5 to 100°C T4 to 135°C T3 to 150°C
Connection cable	3 x 0.75 mm²
Code **MD**	1 m PVC grey
Code **MDG**	1 m PUR yellow
Code **MDGA**	1 m PUR yellow armoured
Code **MDT**	1 m Silicone
Housing	Aluminium, anodised
Housing protection	IP68
Intrinsically safe (Marking)	Ex **II 2 G EEx d IIC T6 - T3** **LCIE 01 ATEX 6047 X**

Contact protection measures see page 24

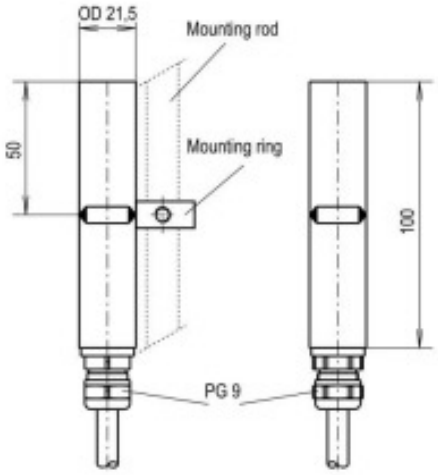

Code		Type
MV	=	**BGU-V-1 PVC**
MVT	=	**BGU-V-1 Sil**
Ex **MVE**	=	**BGU-V-E-1 PVC blue**

1015-2

Technical data

Contact	Reed contact
Contact type	1 SPDT
Contact behaviour	bistable
Switch rating	
Code **MV** and **MVT**	230 V AC, 60 VA, 1 A 230 V DC, 30 W, 0.5 A
Code **MVE**	for use in intrinsically safe circuit only with max. 100 mA and max. 30 V
adder **/N**	for use in control circuits to DIN EN 60947-5-6
Max. ambient temperature	
Code **MV**	90°C
Code **MVT**	150°C
Code **MVE**	T6 to 85°C
Connection cable	3 x 0.75 mm²
Code **MV**	1 m PVC grey
Code **MVT**	1 m Silicone
Code **MVE**	1 m PVC blue
Housing	Stainless steel
Housing protection	IP65
Intrinsically safe	Code MVE only
(Marking)	Ex **II 1 G EEx ia IIC T6 - T3** **LCIE 01 ATEX 6047 X**

Contact protection measures see page 24

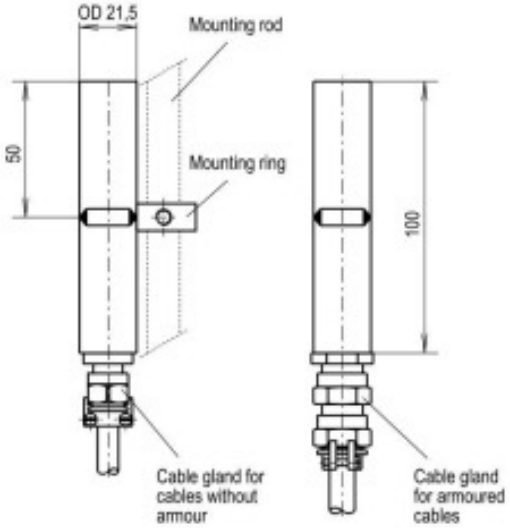

Code		Type
Ex **MVD**	=	**BGU-V-EEx d-1 PVC**
MVDG	=	**BGU-V-EEx d-1 PUR**
MVDGA	=	**BGU-V-EEx d-1 PURA**
MVDT	=	**BGU-V-EEx d-1 Sil**

Technical data

Contact	Reed contact
Contact type	1 SPDT
Contact behaviour	bistable
Switch rating	230 V AC, 60 VA, 1 A 230 V DC, 30 W, 0.5 A
adder **/N**	for use in control circuits to DIN EN 60947-5-6
Max. ambient temperature	
Code **MVD**, **MVDG** and **MVDGA**	T6 to 85°C
Code **MVDT**	T6 to 85°C T5 to 100°C T4 to 135°C T3 to 150°C
Connection cable	3 x 0.75 mm²
Code **MVD**	1 m PVC grey
Code **MVDG**	1 m PUR yellow
Code **MVDGA**	1 m PUR yellow armoured
Code **MVDT**	1 m Silicone
Housing	Stainless steel
Housing protection	IP68
Intrinsically safe (Marking)	Ex **II 2 G EEx d IIC T6 - T3** **LCIE 01 ATEX 6047 X**

Contact protection measures see page 24

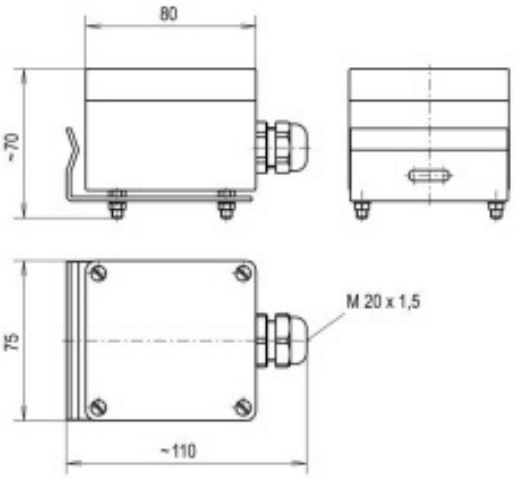

Code		Type
MHT	=	**STMU**

Technical data

Contact	Reed contact
Contact type	1 SPDT
Contact behaviour	bistable
Switch rating adder **/N**	230 V AC, 60 VA, 1 A 230 V DC, 30 W, 0.5 A for use in control circuits to DIN EN 60947-5-6
Max. ambient temperature	380°C
Housing	Aluminium
Housing protection	IP65

Contact protection measures see page 24

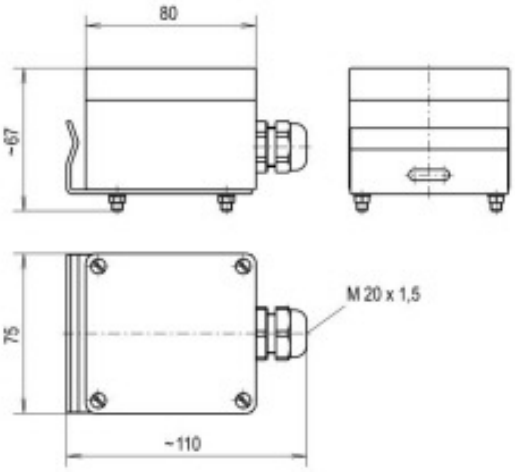

Code		Type
MIH	=	**STMI-H**
MIL	=	**STMI-L**

Technical data

	Contact		Inductive proximity sensor SJ 3.5-SN
	Contact behaviour		bistable
Code	**MIH**	Function	High alarm
Code	**MIL**	Function	Low alarm
	Nominal voltage		8 V DC (Ri approx. 1 kOhm)
	Max. ripple		< 5 %
	Supply voltage U_B		5 - 25 V
	Power consumption active area active area	 free covered	 > 3 mA < 1 mA
	Connection cable - max. resistance		< 100 Ohm
	Self-inductance		160 µH
	Self-capacitance		20 nF
	Ambient temperature		-40°C to +100°C
	Housing		Aluminium
	Housing protection		IP65

KSR Level Sensors are used to measure and transmit the level of liquids in conjunction with a KSR control unit. It is based on the float principle with magnetic transmission in a 3-wire potentiometer circuit.
A float with a built-in magnetic system actuates small reed contacts through the walls of the bypass chamber. These reed switches form a resistance measuring chain that continuously generates a voltage proportional to the height of the level.
The resistance measuring chain is closely stepped and is made up from small chips soldered onto a PCB. Due to this assembly the generated voltage is approximately continuous.

Depending on requirements and design several different contact separations are available.

Options:
Installation of 2-wire transmitter in terminal box possible (see catalogue 1011).

Advantages:
- standard signal (4 - 20mA) in the field, interference-free
- signal transmission over large distances possible
- use in hazardous areas possible

Internal circuit diagram level sensors

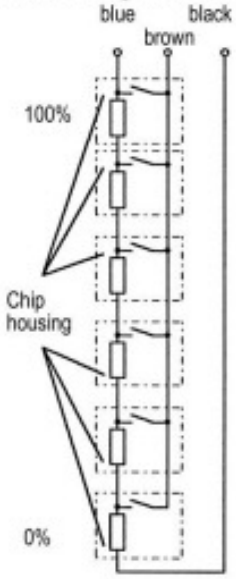

Type code

Code						
3		**Basic type**				
	MG	**Level sensor**				
3.1		**Electrical connection (terminal box)**				
...	A	Aluminium - top	APL	Polyester - top (Ex-design)	ALCD	Aluminium - top with digital display
	AU	Aluminium - bottom	APLU	Polyester - bottom (Ex-design)	ALCDU	Aluminium - bottom with digital display
	AP	Polyester - top	AV.	Stainless steel - top	AVLCD	Stainless steel - top with digital display
	APU	Polyester - bottom	AV.U	Stainless steel - bottom	AVLCDU	Stainless steel - bottom with digital display
		1st key		2nd key		
3.2		**Material sensor tube**		**Contact separation**		**Optional code**
.../...	V	Stainless steel	K18	18 mm		contact separation 5 / 10 / 15 mm only
			K15	15 mm	/HT..	High temperature +120°C ... +200°C
			K10	10 mm	/TT..	Low temperature -10°C ... -80°C
			K5	5 mm		
3.3		**Option: Head mounted transmitter in terminal box** (see catalogue 1011)				
...	TS	Standard design type TS				
	TE	Ex-design type TE				
	TEH	Ex-design type TEH-HART®				
	TD	Profibus/Foundation Fieldbus type PR 5350 B				
		1st key		2nd key		3rd key
3.4		Sensor tube length		Measuring range		Sensor tube dimensions
.../.../...	L.../	Length in mm	M.../	Range in mm	14	OD 14 mm
3.5		**Optional code**				
...	-	none, resistance of measuring chain: depending on length and contact separation				
	Ex	Control circuit EEx ib IIC or EEx ia IIC, resistance of measuring chain: 3.2 kOhm ... 50 kOhm				

1015-2

Ordering example:

	Basic type		Electrical connection		Material Sensor tube Contact separation		Option Head-mounted transmitter		Sensor tube-length Measuring range Sensor tube-dimensions		Optional code
Code	3	-	3.1	-	3.2	-	3.3	-	3.4	-	3.5
	MG	-	AU	-	VK10	-	TE	-	L1650 / M1500 / 14	-	Ex

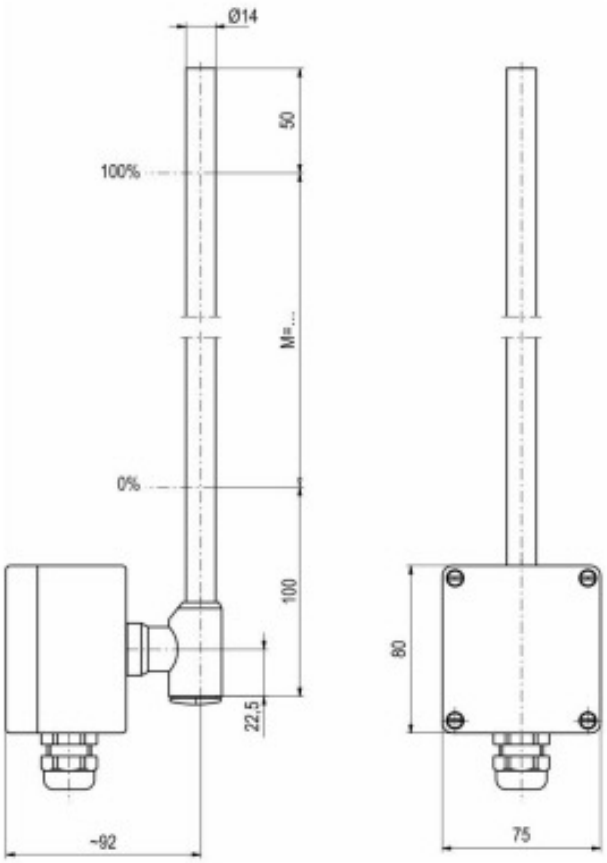

Type MG-A.VK../..-L.../M.../14

Technical data

Terminal box	**A.**	= Aluminium, 80 x 75 x 57 mm
	AP.	= Polyester, 80 x 75 x 55 mm
	AV.	= Stainless steel
Sensor tube	**V**	= Stainless steel 316 Ti Tube Dia. 14 x 1 mm
Contact separation	**K18**	= 18 mm
	K15	= 15 mm (also HT or TT)
	K10	= 10 mm (also HT or TT)
	K5	= 5 mm (also HT or TT)

Resistance of measuring chain
Standard design depending on length and contact separation

Ambient temperature at sensor tube

Standard design		-10°C	...	+120°C
Type code	**HT**	+120°C	...	+200°C
Type code	**TT**	-10°C	...	-80°C

Type MG-A.VK../..-L.../M.../14-Ex

II 2G EEx ia IIC T4-T6 KEMA 01 ATEX1052X
II 2D T 80°C IP6X

Technical data

Terminal box	**A.**	= Aluminium, 80 x 75 x 57 mm
	APL.	= Polyester anti-static, 80 x 75 x 55 mm
	AV.	= Stainless steel
Sensor tube	**V**	= Stainless steel 316 Ti Tube Dia. 14 x 1 mm
Contact separation	**K18**	= 18 mm
	K15	= 15 mm
	K10	= 10 mm
	K5	= 5 mm

Resistance of measuring chain
Standard design 3.2 kOhm ... 50 kOhm

Maximal permissible surface temperature at sensor tube

T4	+100°C
T5	+65°C
T6	+50°C

KSR Level Sensors
Housing options

Type code **A.** = Aluminium 80 x 75 x 57 mm
Type code **AP.** = Polyester 80 x 75 x 55 mm
Type code **APL.** = Polyester 80 x 75 x 55 mm, anti-static

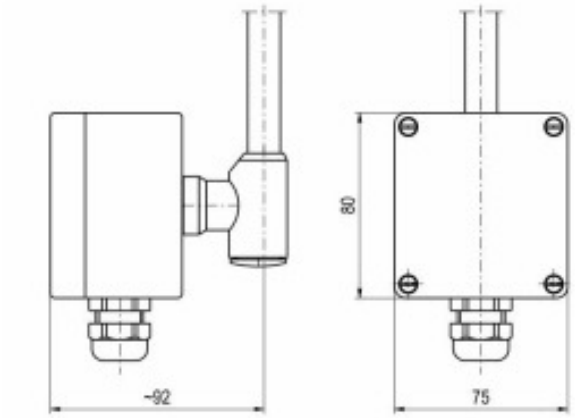

Type code **AV.** = Stainless steel

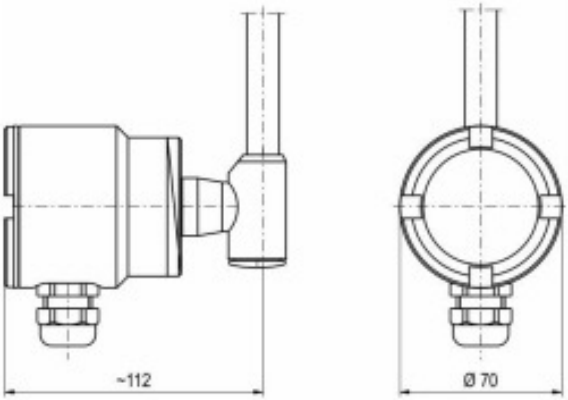

Type code **ALCD.** = Aluminium with digital display
Type code **AVLCD.** = Stainless steel with digital display

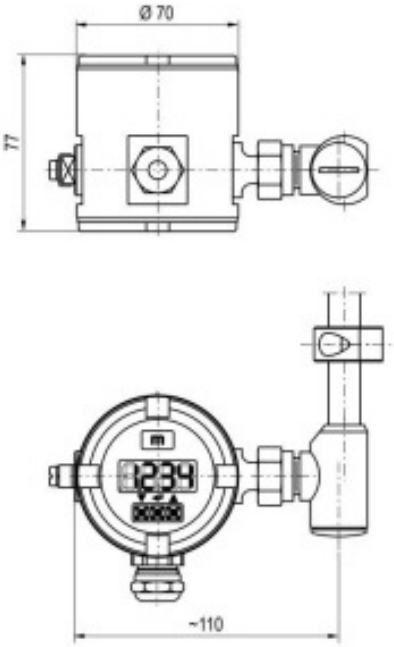

1015-2

Accuracy of KSR Level Sensors

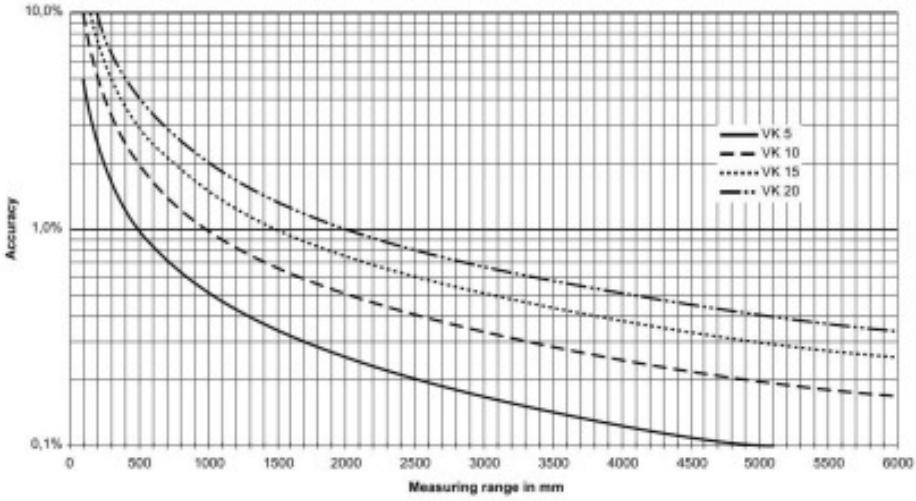

The KSR Level Sensors range FFG-T-... is used for continuous, remote liquid level measurement and based on position monitoring of a magnetic float following the magnetostrictive principle.
The sensors are mounted externally on a KSR Bypass Level Indicator.
The measuring process is initiated by a current impulse. This current generates an axial magnetic field along the length of a wire made of magnetostrictive material, which is held under tension inside the sensor tube. The Bypass Level Indicator float, which sits on the liquid surface, is fitted with permanent magnets. The magnetic field of the float is at right angles to the impulse magnetic field. When the pulse reaches the float the two magnetic fields interact and a torsional force results.
A torsional stress wave is induced in the wire. A piezoceramic pick-up in the sensor housing at the end of the wire converts this into an electrical signal. By measuring the elapsed transit time, it is possible to determine the start point of the torsional stress wave and therefore the float position with a high degree of accuracy.

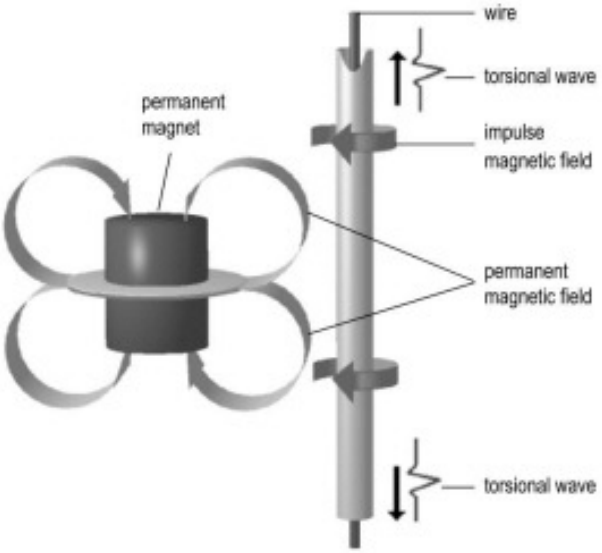

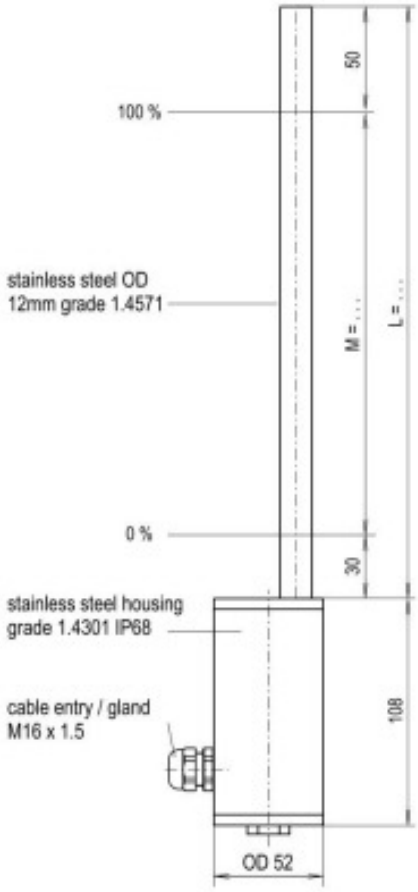

Typ FFG-BT-V-L.../M.../12

Technical Data

Sensor Housing	Stainless steel 1.4301, ingress protection IP68, cable entry M16 x 1.5
Sensor Tube	OD 12 x 1 mm, stainless steel 1.4571
Sensor Length	200 mm .... 6000 mm
Permissible ambient temperature Sensor Tube Sensor Housing	 –45°C ...+125°C Standard-Design –200°C ...+200°C HT-Design –40°C ... +85°C
Connection	2-wire
Supply Voltage	10 ... 30 VDC
Output Signal	4 ... 20 mA
Error Signal	Adjustable to 3.6 mA or 21.5 mA
Accuracy	better ±0.5 mm
Resolution	< 0.1 mm
Linearity	± 0.1 % (20°C) + 0.005 % / K
Load	900 Ohm at U_B = 30V DC 650 Ohm at U_B = 24V DC 100 Ohm at U_B = 12V DC

Typ FFG-BT-V-L.../M.../12-Ex

Ex II 2G EEx ib IIC T3-T6 IBExU 02 ATEX 1124X

Technical Data

in addition to standard type

Permissible ambient temperature		
Equipment category 2	Sensor Tube	Sensor Housing
T6	-25°C ... +85°C	-40°C ... +40°C
T5	-25°C ... +100°C	-40°C ... +55°C
T4	-25°C ... +135°C	-40°C ... +85°C
T3	-25°C ... +150°C	-40°C ... +85°C
Permissible circuit values	Type of protection intrinsically safe EEx ib IIC U_i < 30 V I_i < 200 mA P_i < 1 W L_i < 250 µH C_i < 5 nF	

1015-2

Options Chamber ends

with dampening spring on request

Chamber end top

1
Welding cap

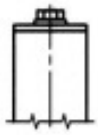

2
Flat top with
vent plug BSP ½"

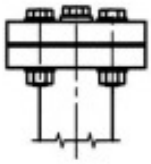

3
Flanged with
vent plug BSP ½"

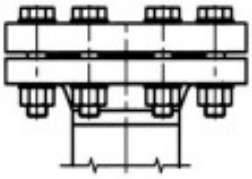

4
Flanged e.g. flange
facings with groove and
tongue acc. to DIN 2512

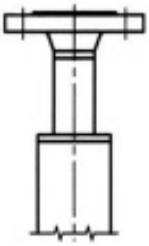

5
Flat top with
vent flange

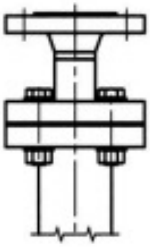

6
Flanged with
vent flange

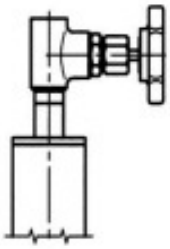

7
Flat top with
vent valve

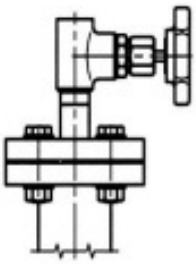

8
Flanged with
vent valve

1015-2

Chamber end bottom

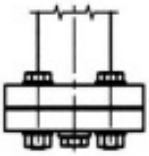

9
Flanged with
drain plug BSP ½"

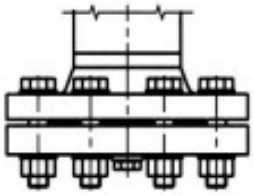

10
Flanged with drain plug
BSP ½" e.g. flange facings
with groove and tongue
acc. DIN 2512

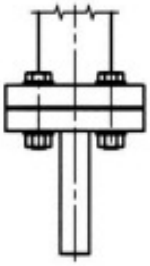

11
Flanged with
drain nozzle

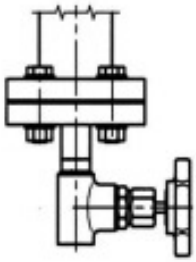

12
Flanged with
drain valve

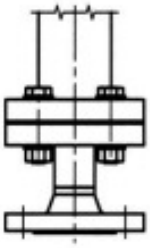

13
Flanged with
drain flange

Options Process connection

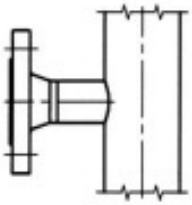

14
Welding neck flanges
up to DN 25 (1")

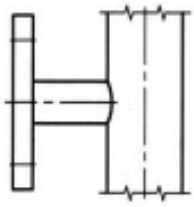

15
Blind flange
above DN 32 (1¼")

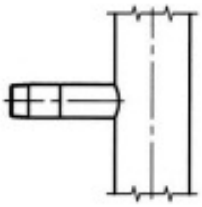

16
Threaded GN...
(Male)

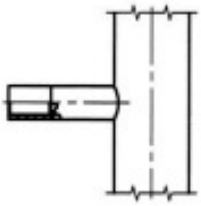

17
Threaded GM...
(Female)

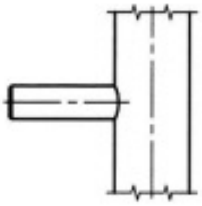

18
Welding stub S...

Examples Process connection

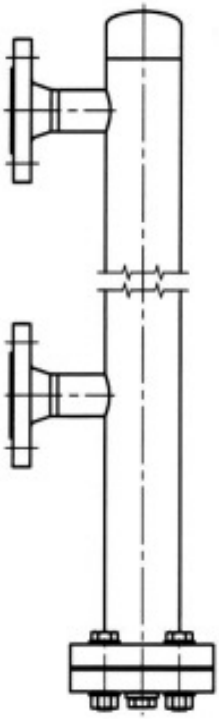

19
Standard
2 process connections
side-side

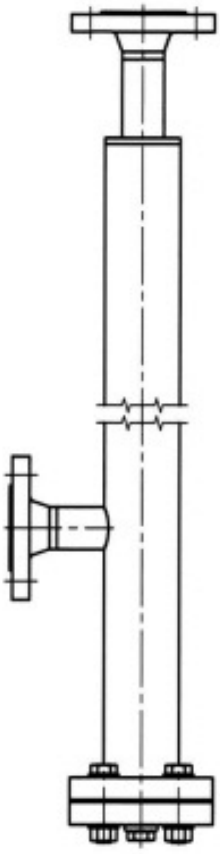

20
Process connections
top and side

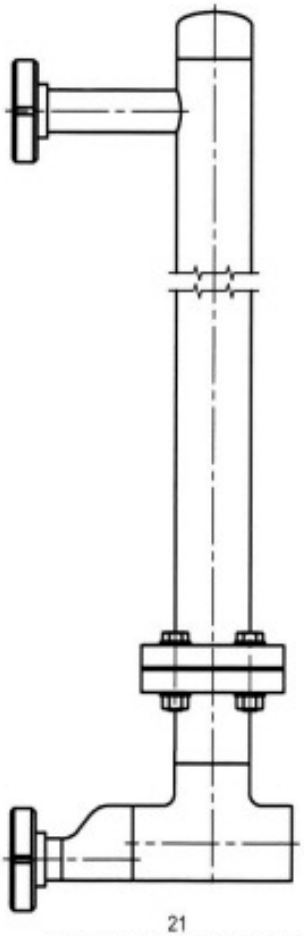

21
2 process connections side-side
threaded acc. to DIN 11851
lower process connection with
eccentric reducer

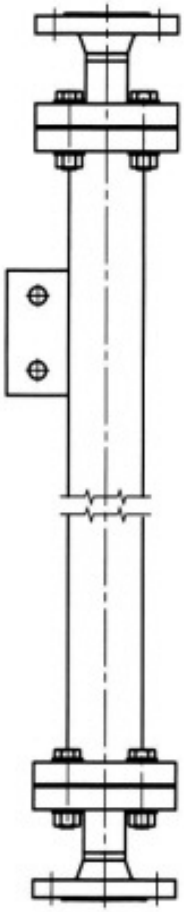

22
Process connections
top and bottom
Option: Support brackets