KSR KUEBLER

1008-1

Magnetic Switches

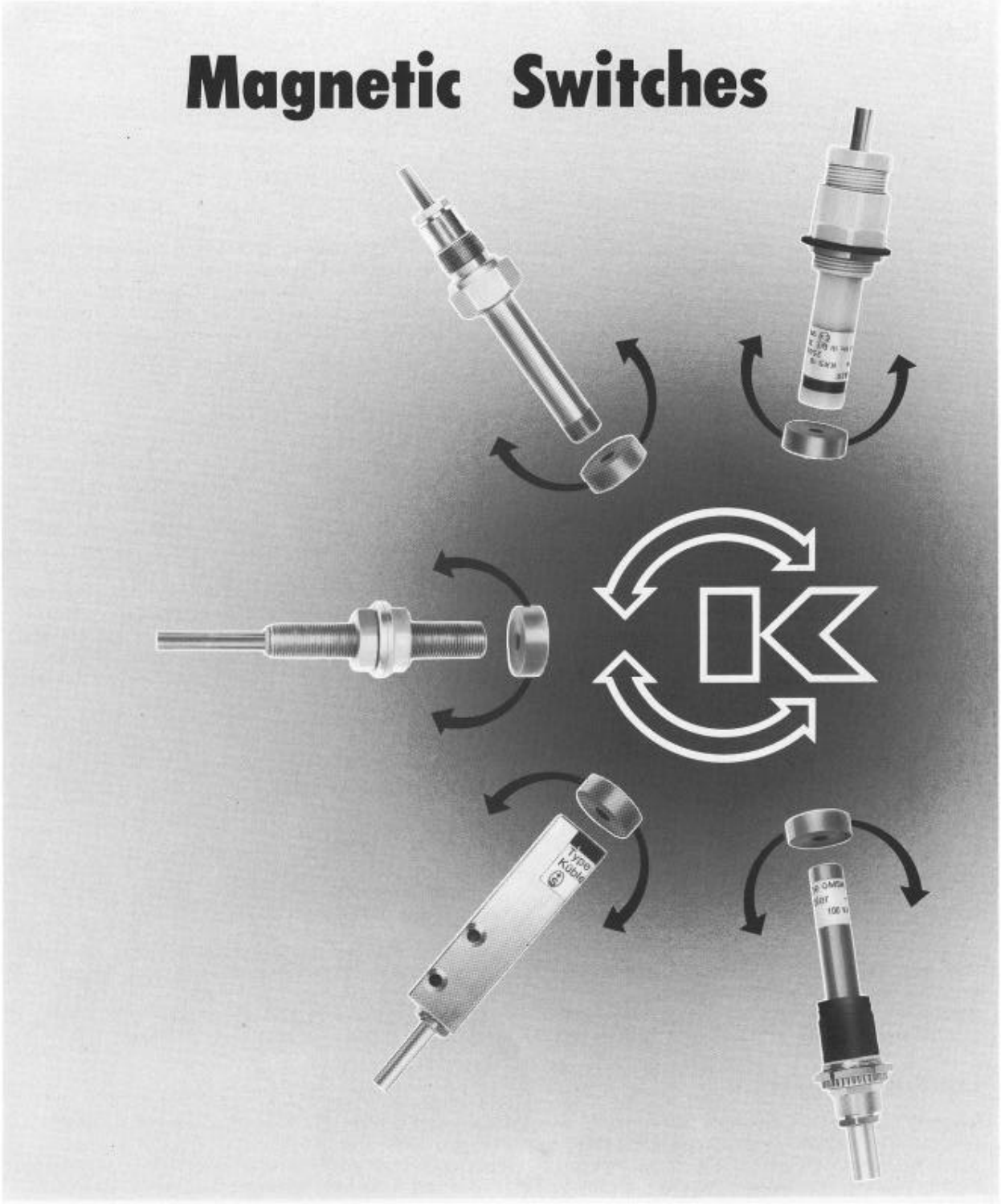

Construction and Operation:

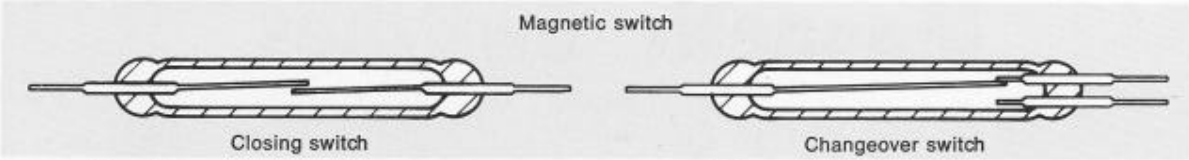

A magnetic switch contact consists of two flat contact tongues which are sealed in a glass tube filled with protective gas.
When approached by a permanent magnet, the overlapping contact tongue ends attract each other and spring into contact. When the permanent magnet is removed, the contact tongues demagnetize immediately and return to their rest positions as quickly as lightening. The air gap between the contact tongue ends is only 0.2 - 0.3 mm and the mass of the contact tongues to be moved and their elastic force are very small. Therefore, a magnetic switch switches almost inertia-lessly and it can be referred to as a "quasi-electronic component".

Contact Functions:

Closing switch
If a permanent magnet (a north pole red or a south pole blue) is placed near the actuating zone of the magnetic switch, the contact tongues of the in-built protective gas contact are magnetized and attract each other. As the magnetic field between the contact tongues increases quadratically as the air gap becomes smaller, the magnetic switch contact springs back quickly to close position.

Opening switch
A contact tongue of a closing switch is magnetized by a polarizing magnet with the south pole field in such a way that the contact closes.
If a south pole blue actuating magnet is placed near the magnetic switch, both contact tongues are magnetized with the same polarity. Like poles repel each other and the magnetic switch contact opens.

Changeover switch
A changeover contact has one moveable and two static contact tongues. When there is no magnetic field, the moveable contact tongue rests on the static home contact (break contact) by means of its elastic force.
When an actuating magnetic is placed near it (north pole red or south pole blue) the moveable contact tongue is attracted by the operating contact (make contact). The home contact opens and the operating contact springs to close position.

Bistable
By means of a polarizing magnet, a contact tongue is magnetized with a south pole field in such a way that when a permanent magnet north pole red is placed in its proximity the magnetic switch contact closes and opens again when a permanent magnet south pole blue is placed in its proximity.

Mechanical Durability:

Operation of the magnetic switch with permanent magnets (or electromagnets) is completely free of wear and tear, as the magnetic field does not become worn out. As the contact tongues are extremely soft, fatigue fractures do not appear even after 3×10^9 switching operations (flections).
If a magnetic switch were used once every second, then it would take a hundred years to carry out 3×10^9 (3 thousand million) switching operations. Its mechanical durability is therefore practically unlimited.

Electrical Durability:

Magnetic switches are sensitive towards excessive current loads. As the elastic force of the soft contact tongues is only extremely small, a welding effect between a few molecules of the contact material suffices to cause the contact tongues to adhere. As magnetic switches open their contacts extremely quickly, particularly high self-induction voltages arise when switching of inductive switch devices, such as relays, magnetic valves and lifting magnets. If contact protective measures are carried out, a high electrical durability is achieved.

Connection Diagrams:

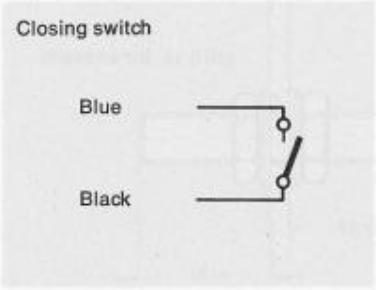

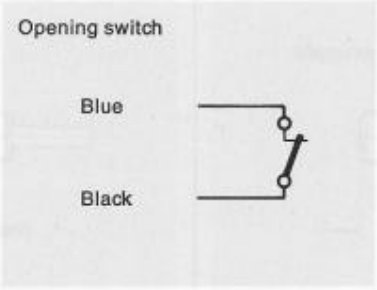

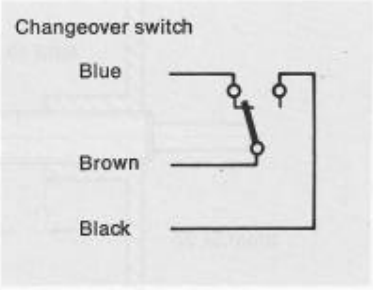

Switching Hysteresis:

The extent of the switching hysteresis (stroke of the actuating magnet) is dependent upon the size of the actuaing magnet and the magnetic shunt via the iron content of the surroundings. In the case of most magnetic switches this amounts to approximately 5 to 10 mm stroke of the actuating magnet.

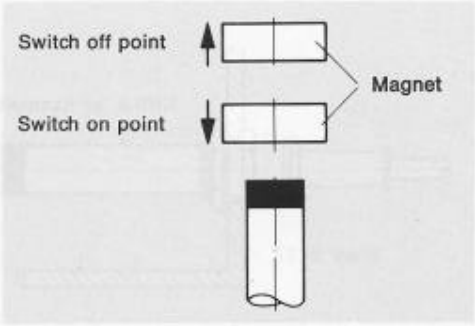

Switch Point Exactness:

The reproducible switch point exactness of magnetic switches is extremely high in constant conditions and lies at 0.01 mm.
When barium ferrite magnets are used as actuating magnets the switch point shifts depending on ambient temperature changes, as the magnetic field becomes stronger with sinking temperatures and weaker with increasing temperatures. At the same time, temperature behavior is not linear; below 0° C the magnetic field barely increases and above 100° C it only becomes slightly weaker.
In the case of a temperature change of ± 20° C, the switch point shifts by approximately ±0.05 mm. For practical purposes, therefore, the switch point of a magnetic switch can be considered stable.

Shock Resistance:

If there is a possibility that vigorous shocks could crop up, it is advisable to secure the magnetic switch with flexible rubber.
In an axial direction, there is the least sensitivity to shocks and vibrations. Monostable magnetic switches, such as the types MRS 10, KRS 9, GMS 9, KRU 9, GMU 9 and others, can be subjected to shocks up to 100 g when secured elastically.
Bistabile magnetic switches, such as the types MRSM 16, GMSM 16, GMUM 16 and others, are suitable when elastically secured for shocks of 10 - 20 g (g – acceleration due to gravity).

Installations

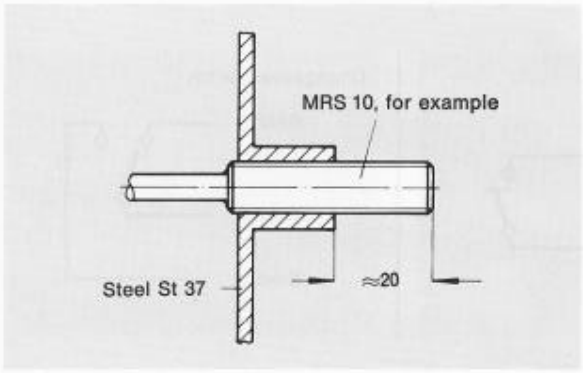

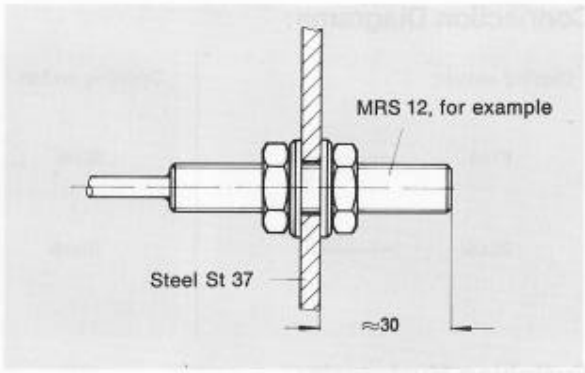

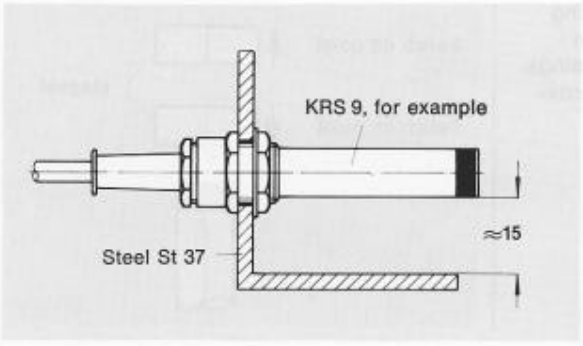

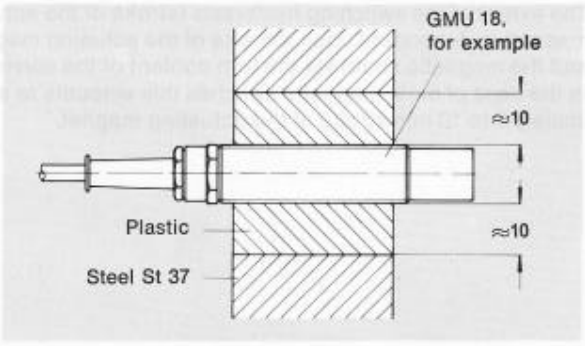

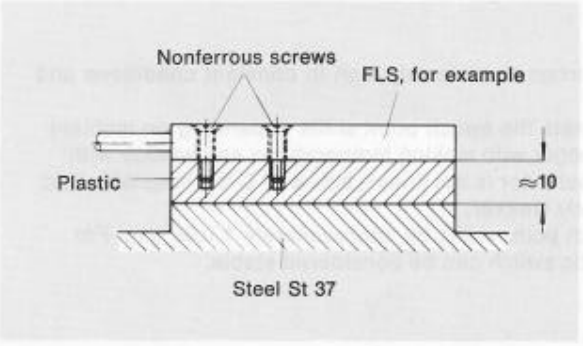

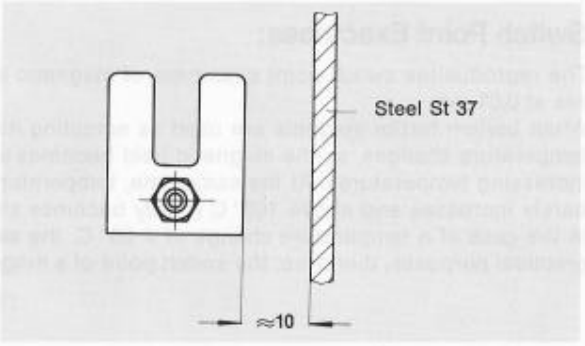

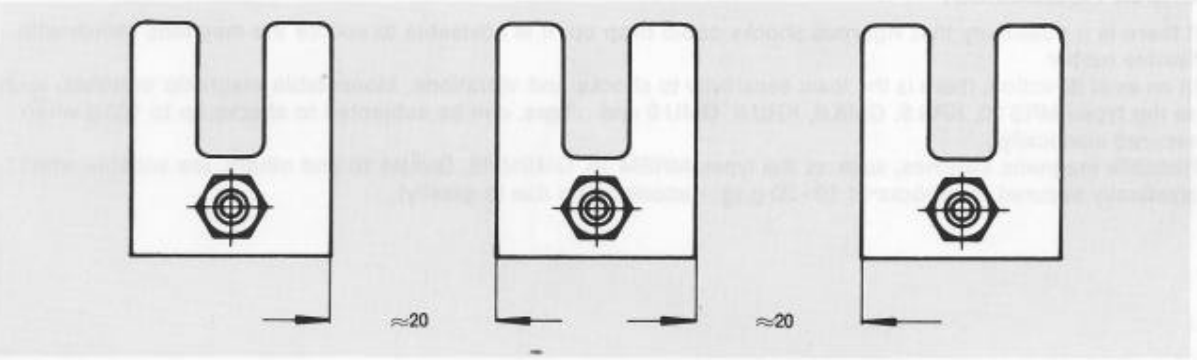

Contact Protection Measures:

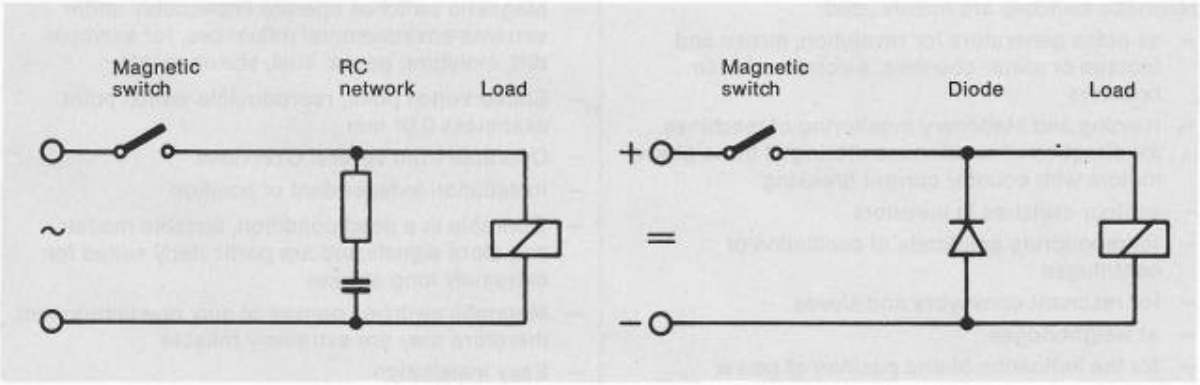

RC Networks for Protective Wiring of Protective Gas Contacts for Inductive Loading to Alternating Current

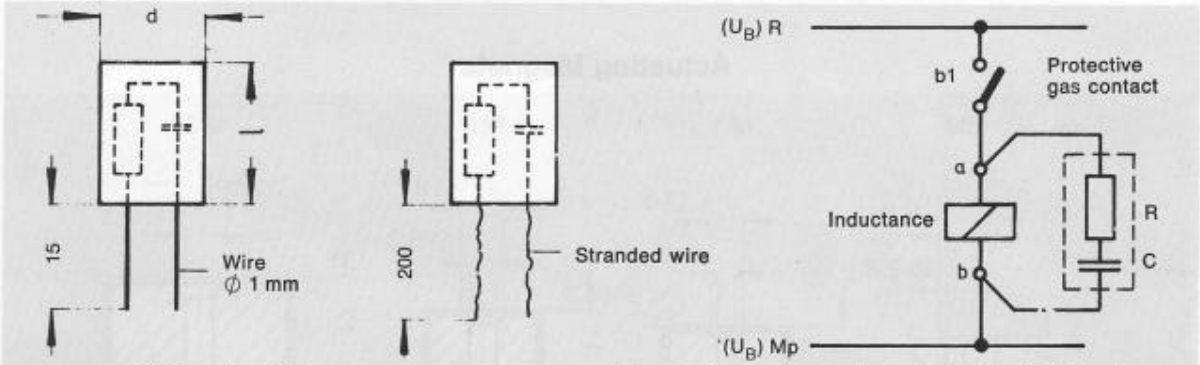

d = from Φ 16 mm to Φ 25 mm
l = from 26 mm to 58 mm

RC networks can be supplied selectively with 15 mm long connecting wires or with 200 mm long strands.

For Protective Gas Contacts from 10 - 40 VA

Capacitance	Resistance	Voltage	Type
0,33 µF	100 Ohm	24 V~	A 3/24
0,33 µF	220 Ohm	48 V~	A 3/48
0,33 µF	470 Ohm	110 V~	A 3/110
0,33 µF	1000 Ohm	220 V~	A 3/220
0,47 µF	100 Ohm	24 V~	A 4/24
0,47 µF	220 Ohm	48 V~	A 4/48
0,47 µF	470 Ohm	110 V~	A 4/110
0,47 µF	1000 Ohm	220 V~	A 4/220
0,68 µF	100 Ohm	24 V~	A 6/24*
0,68 µF	220 Ohm	48 V~	A 6/48*
0,68 µF	470 Ohm	110 V~	A 6/110*
0,68 µF	1000 Ohm	220 V~	A 6/220*

For Protective Gas Contacts from 10 - 40 VA

Capacitance	Resistance	Voltage	Type
0,33 µF	47 Ohm	24 V~	B 3/24
0,33 µF	100 Ohm	48 V~	B 3/48
0,33 µF	470 Ohm	110 V~	B 3/110
0,33 µF	820 Ohm	220 V~	B 3/220
0,47 µF	47 Ohm	24 V~	B 4/24
0,47 µF	100 Ohm	48 V~	B 4/48
0,47 µF	470 Ohm	110 V~	B 4/110
0,47 µF	820 Ohm	220 V~	B 4/220
0,68 µF	47 Ohm	24 V~	B 6/24*
0,68 µF	100 Ohm	48 V~	B 6/48*
0,68 µF	470 Ohm	110 V~	B 6/110*

Range of Application:

Magnetic switches are mainly used:

- as pulse generators for revolution, stroke and footage or meter counters, electromechanic counters
- running and stationary monitoring of machines, for direction of rotation monitoring of three-phase motors with counter current breaking
- as floor switches in elevators
- for monitoring amplitude of oscillation of centrifuges
- for resonant conveyors and sieves
- at weighbridges
- for the indication of end position of power cylinders in pneumatics
- in apparatus engineering for position indication of slides, flaps and valves
- for controlling machine tools
- for level control of fluids
- on textile machines, printing machines, and so on

Advantages

- Magnetic switches operate impeccably under extreme environmental influences, for example dirt, moisture, gases, dust, shavings, etc.
- Stable switch point, reproducible switch point exactness 0.01 mm
- Operable from several directions
- Installation independent of position
- Operable in a dead condition, bistable models can store signals and are particularly suited for extremely long strokes
- Magnetic switches consist of only one component, therefore they are extremely reliable
- Easy installation
- Long electrical durability, more than 10^9 switching operations with corresponding contact protective measures
- Special types for extreme temperatures of −200° C to +200° C
- Particularly priceworthy component for automation

Actuating Magnets

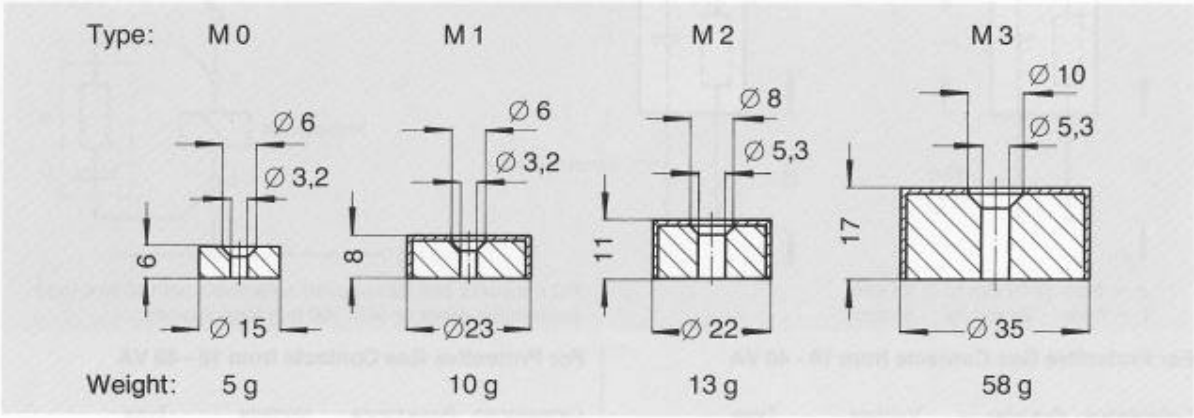

Spacing:

The largest spacing between magnetic switches and permanent magnets is achieved when the permanent magnets are secured directly to iron with nonferrous metal screws. With an iron base the magnetic field is focused, and has in this way a larger range. If the permanent magnets are secured with iron screws, then a part of the magnetic field is short-circuited in the ball hole and the range is thus smaller. When permanent magnets are placed together with smaller spacings than 50 to 60 mm, then the polarity must continually change (north-south-north-south pole, etc.) so that the magnetic field is interrupted between the permanent magnets. Only then are the magnetic switches actuated by each permanent magnet.

For spacings, see page 28.

Mini Magnetic Switch Brass and Steel Casing Material Number 1.4571

Technical Data:

Switching action:	monostable
Contact material:	rhodium
Making and breaking capacity:	max. 10 VA
Switching voltage:	max. 250 V≃
Switching current:	max. 0.5 A
Switching frequency:	1000 switches/second
Switching hysteresis:	approx. 5 mm
Permissible ambient temperature:	−10° C – +80° C
Protection mode:	IP 54
Connecting cable:	NYLHY 2 x 0.25 mm²
Casing:	M-brass V-stainless steel W No. 1.4571

For spacings, see leaf 12.

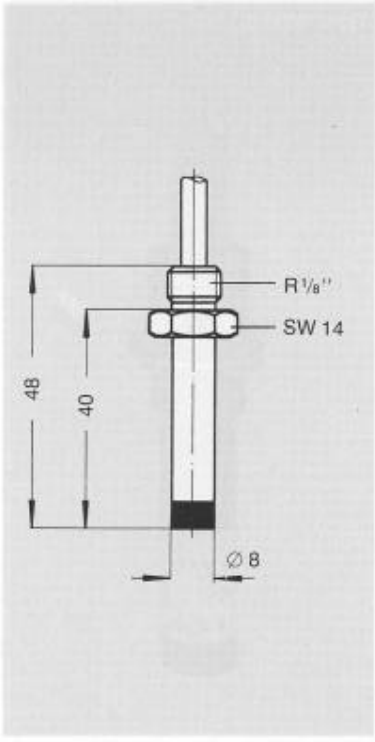

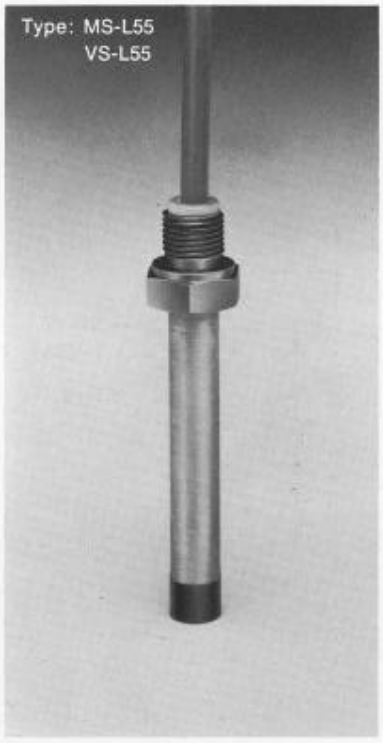

Technical Data:

Switching action:	monostable
Contact material:	rhodium
Making and breaking capacity:	max. 10 VA
Switching voltage:	max. 250 V≃
Switching current:	max. 0.5 A
Switching frequency:	1000 switches/second
Switching hysteresis:	approx. 5 mm
Permissible ambient temperature:	−10° C – +80° C
Protection mode:	IP 54
Connecting cable:	NYLHY 2 x 0.25 mm²
Casing:	M-brass V-stainless steel W No. 1.4571

For spacings, see leaf 12.

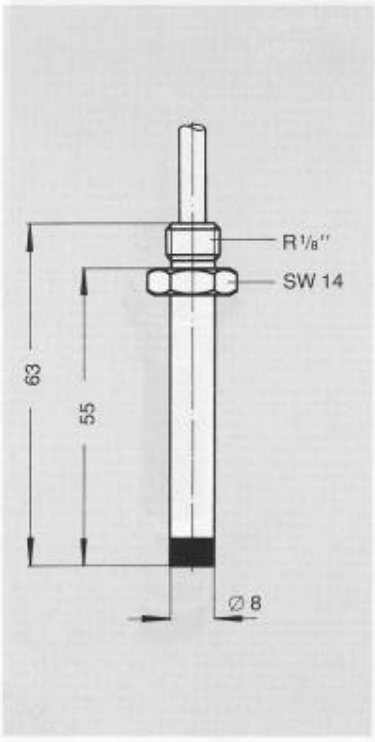

Magnetic Switch in Round Polyamide Casing

Technical Data:

Switching action:	monostable
Contact material:	rhodium
Making and breaking capacity:	max. 10 VA
Switching voltage:	max. 250 V≃
Switching current:	max. 0.5 A
Switching frequency:	1000 switches/second
Switching hysteresis:	approx. 5 mm
Permissible ambient temperature:	−10° C – +80° C
Protection mode:	IP 65
Connecting cable:	NYLHY 2 x 0.75 mm²
Casing:	glass fibre reinforced polyamide

For spacings, see leaf 12.

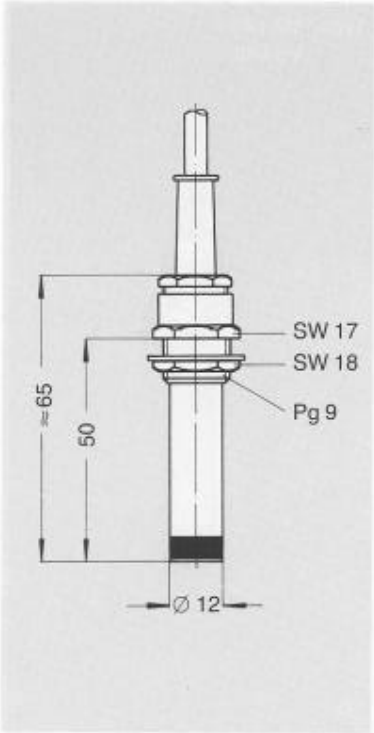

Technical Data:

Switching action:	monostable
Contact material:	rhodium
Making and breaking capacity:	KRS 9 max. 60 VA KRU 9 max. 40 VA
Switching voltage:	max. 250 V≃
Switching current:	KRS 9 max. 2 A KRU 9 max. 1 A
Switching frequency:	300 switches/second
Switching hysteresis:	approx. 5 mm
Permissible ambient temperature:	−10° C – +80° C
Protection mode:	IP 65
Connecting cable:	KRS 9 NYLHY 2 x 0.75 mm² KRU 9 NYLHY 3 x 0.75 mm²
Casing:	glass fibre reinforced polyamide

For spacings, see leaf 12.

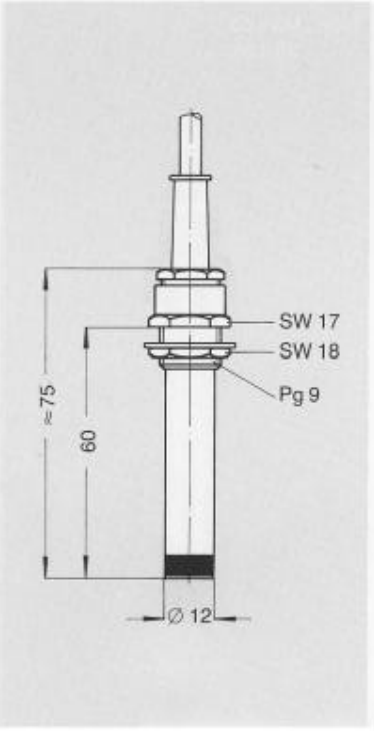

Magnetic Switch in Round Polyamide Casing

Technical Data:

Switching action:	monostable
Contact material:	tungsten
Making and breaking capacity:	max. 60 VA
Switching voltage:	max. 250 V≃
Switching current:	max. 1 A
Switching frequency:	100 switches/second
Switching hysteresis:	approx. 2 - 3 mm
Permissible ambient temperature:	−10° C – +80° C
Protection mode:	IP 65
Connecting cable:	NYLHY 3 x 0.75 mm²
Casing:	glass fibre reinforced polyamide

For spacings, see leaf 12.

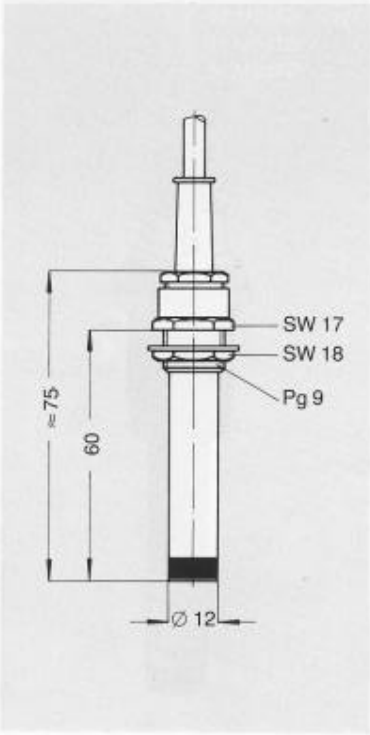

Technical Data:

Switching action:	monostable
Contact material:	rhodium
Making and breaking capacity:	GMS 9 max. 100 VA GMU 9 max. 40 VA
Switching voltage:	max. 250 V≃
Switching current:	GMS 9 max. 2 A GMU 9 max. 1 A
Switching frequency:	300 switches/second
Switching hysteresis:	GMS 9 approx. 3-4 mm GMU 9 approx. 5 mm
Permissible ambient temperature:	−10° C – +80° C
Protection mode:	IP 65
Connecting cable:	GMS 9 NYLHY 3 x 0.75 mm² GMU 9 NYLHY 3 x 0.75 mm²
Casing:	glass fibre reinforced polyamide

For spacings, see leaf 12.

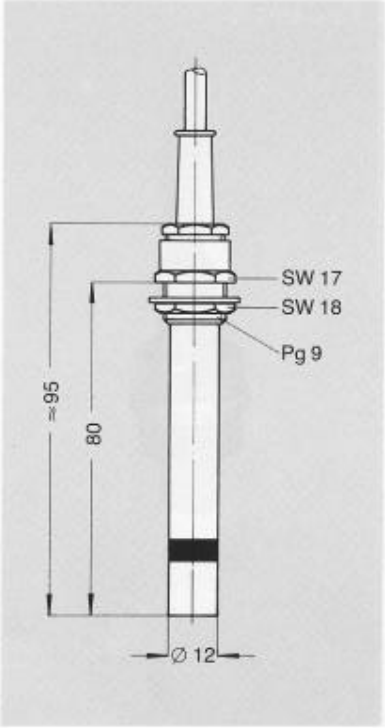

Magnetic Switch in Round Polyamide and Brass Casing Exterior Thread M 10x1

Technical Data:

Switching action:	GMSM 16 and GMUM 16 bistable GMOM 16 polarized
Contact material:	rhodium
Making and breaking capacity:	GMSM 16 and GMOM 16 max. 100 VA GMUM 16 max. 40 VA
Switching voltage:	max. 250 V≃
Switching current:	GMSM 16 and GMOM 16 max. 2 A GMUM 16 max. 1 A
Switching frequency:	300 switches/second
Permissible ambient temperature:	−10° C – +80° C
Protection mode:	IP 65
Connecting cable:	GMSM 16 and GMOM 16 NYLHY 2 x 0.75 mm² GMUM 16 NYLHY 3 x 0.75 mm²
Casing:	glass fibre reinforced polyamide

For spacings, leaf 12.

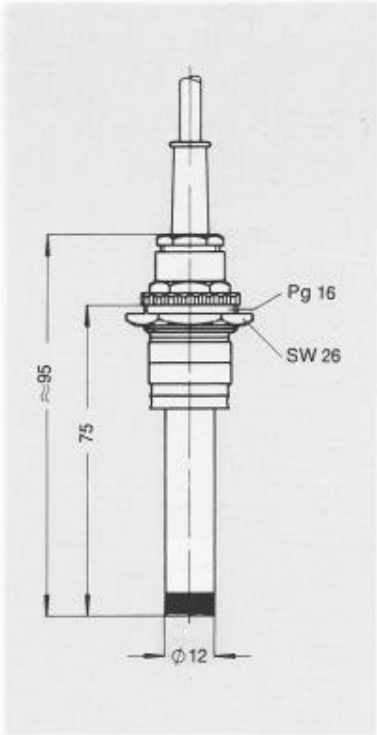

Technical Data:

Switching action:	monostable
Contact material:	rhodium
Making and breaking capacity:	max. 10 VA
Switching voltage:	max. 250 V≃
Switching current:	max. 0.5 A
Switching frequency:	1000 switches/second
Switching hysteresis:	approx. 5 mm
Permissible ambient temperature:	−10° C – +80° C
Protection mode:	IP 54
Connecting cable:	NYLHY 2 x 0.75 mm²
Casing:	brass

For spacings, see leaf 12.

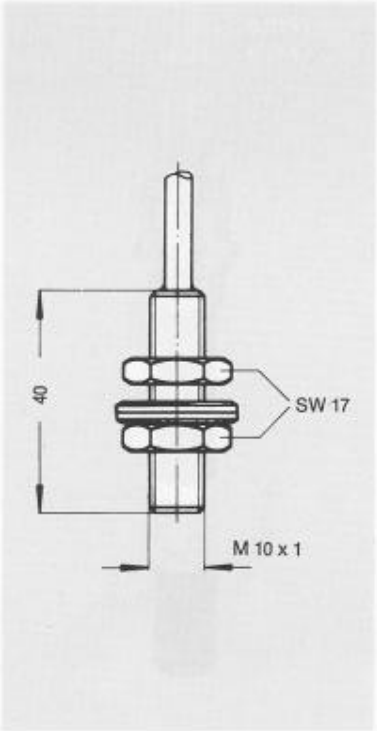

Magnetic Switch in Round Brass Casing with Exterior Thread M 12x1 and M 20x1

Technical Data:

Switching action:	monostable
Contact material:	rhodium
Making and breaking capacity:	MRS 12 max. 60 VA MRU 12 max. 40 VA
Switching voltage:	max. 250 V≃
Switching current:	MRS 12 max. 2 A MRU 12 max. 1 A
Switching frequency:	300 switches/second
Switching hysteresis:	approx. 5 mm
Permissible ambient temperature:	−10° C – +80° C
Protection mode:	IP 54
Connecting cable:	MRS 12 NYLHY 2 x 0.75 mm² MRU 12 NYLHY 3 x 0.75 mm²
Casing:	brass

For spacings, see leaf 12.

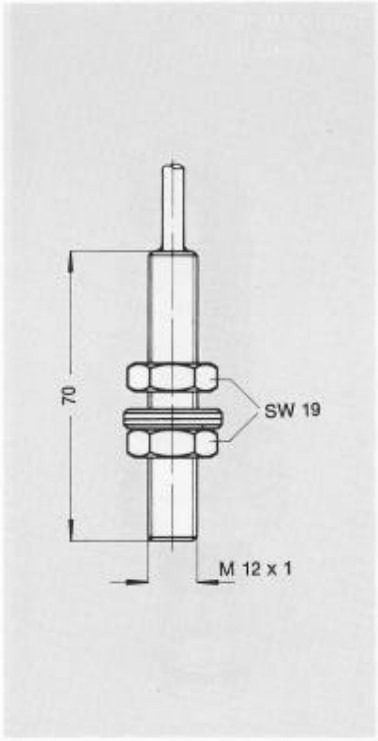

Technical Data:

Switching action:	monostable
Contact material:	rhodium
Making and breaking capacity:	MRS 20 max. 60 VA MRU 20 max. 40 VA
Switching voltage:	max. 250 V≃
Switching current:	MRS 20 max. 2 A MRU 20 max. 1 A
Switching frequency:	300 switches/second
Switching hysteresis:	MRS 20 approx. 3 - 4 mm MRU 20 approx. 5 mm
Permissible ambient temperature:	−10° C – +80° C
Protection mode:	IP 65
Connecting cable:	MRS 20 NYLHY 2 x 0.75 mm² MRU 20 NYLHY 3 x 0.75 mm²
Casing:	brass

For spacings, see leaf 12.

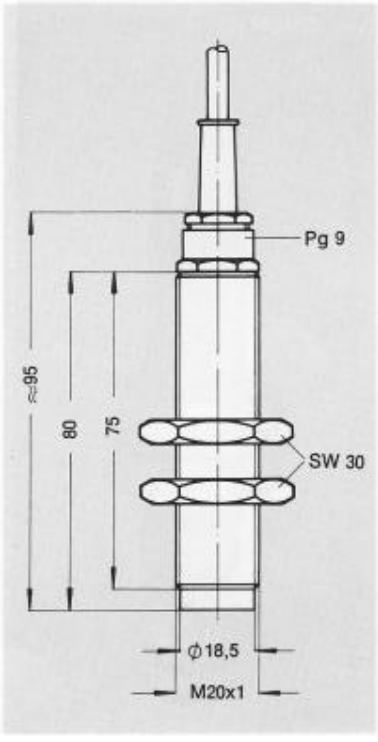

Magnetic Switch in Round Polyamide Casing with Exterior Thread M 18 x 1.5

Technical Data:

Switching action:	monostable
Contact material:	rhodium
Making and breaking capacity:	GMS 18 max. 60 VA GMU 18 max. 40 VA
Switching voltage:	max. 250 V≃
Switching current:	GMS 18 max. 2 A GMU 18 max. 1 A
Switching frequency:	300 switches/second
Switching hysteresis:	approx. 5 mm
Permissible ambient temperature:	−10° C – +80° C
Protection mode:	IP 65
Connecting cable:	GMS 18 NYLHY 2 x 0.75 mm² GMU 18 NYLHY 3 x 0.75 mm²
Casing:	polyamide

For spacings, see leaf 12.

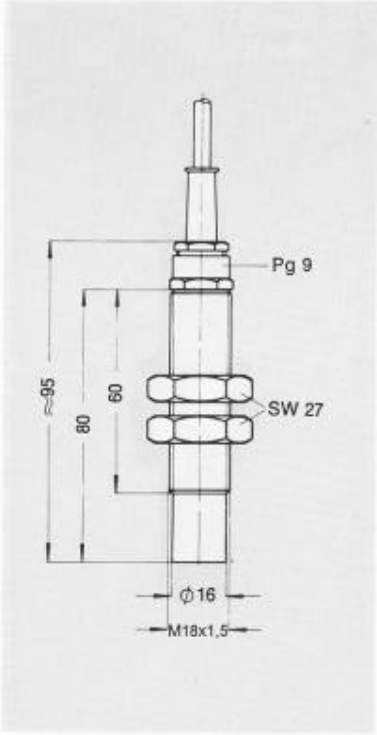

Technical Data:

Switching action:	monostable
Contact material:	rhodium
Making and breaking capacity:	max. 40 A
Switching voltage:	max. 250 V≃
Switching current:	max. 1 A
Switching frequency:	300 switches/second
Permissible ambient temperature:	−10° C – +80° C
Protection mode:	IP 65
Connecting cable:	NYLHY 3 x 0.75 mm²
Casing:	polyamide

For spacings, leaf 12.

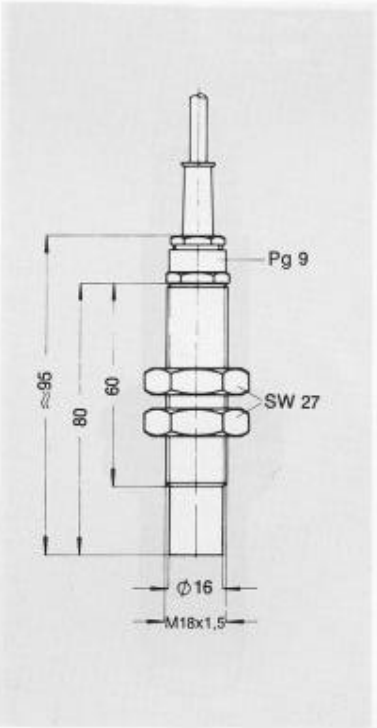

Magnetic Switch in Flat Polyamide Casing

Technical Data:

Switching action:	monostable
Contact material:	rhodium
Making and breaking capacity:	DRS max. 60 VA DRU max. 40 VA
Switching voltage:	max. 250 V~
Switching current:	DRS max. 2 A DRU max. 1 A
Switching frequency:	300 switches/second
Switching hysteresis:	approx. 5 mm
Permissible ambient temperature:	−10° C – +80° C
Protection mode:	IP 54
Connecting cable:	DRS NYLHY 2 x 0.75 mm² DRU NYLHY 3 x 0.75 mm²
Casing:	glass fibre reinforced concrete

For spacings, leaf 12.

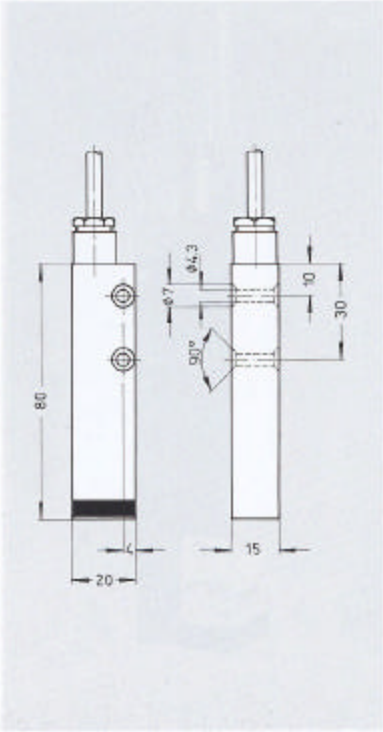

Technical Data:

Switching action:	bistable
Contact material:	rhodium
Making and breaking capacity:	DRSM max. 100 VA DRUM max. 40 VA
Switching voltage:	max. 250 V~
Switching current:	DRSM max. 2 A DRUM max. 1 A
Switching frequency:	300 switches/second
Permissible ambient temperature:	−10° C – +80° C
Protection mode:	IP 54
Connecting cable:	DRSM NYLHY 2 x 0.75 mm² DRUM NYLHY 3 x 0.75 mm²
Casing:	glass fibre reinforced concrete

For spacings, see leaf 12.

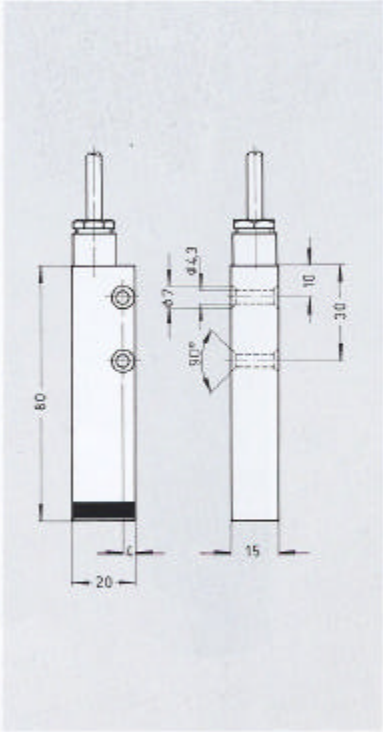

Magnetic Switch in Flat Polyamide Casing

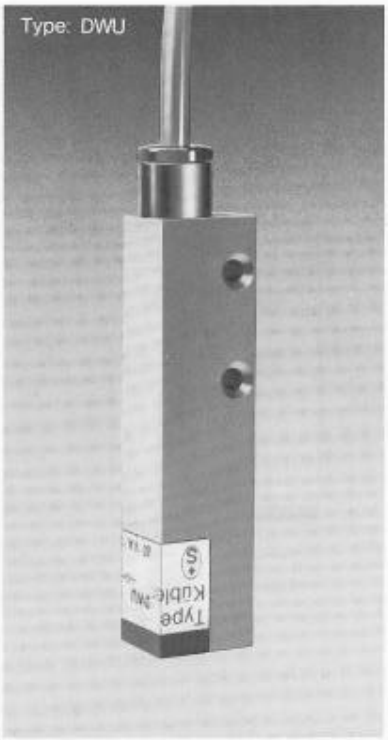

Technical Data:

Switching action:	monostable
Contact material:	tungsten
Making and breaking capacity:	max. 60 VA
Switching voltage:	max. 250 V≃
Switching current:	max. 1 A
Switching frequency:	100 switches/second
Switching hysteresis:	approx. 2 - 3 mm
Permissible ambient temperature:	−10° C – +80° C
Protection mode:	IP 54
Connecting cable:	NYLHY 3 x 0.75 mm²
Casing:	glass fibre reinforced polyamide

For spacings, see leaf 12.

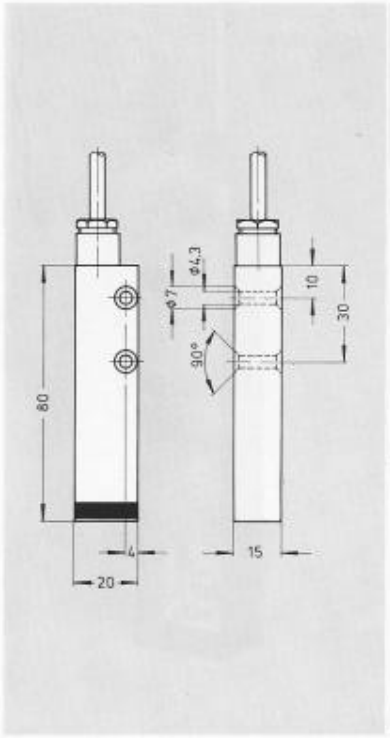

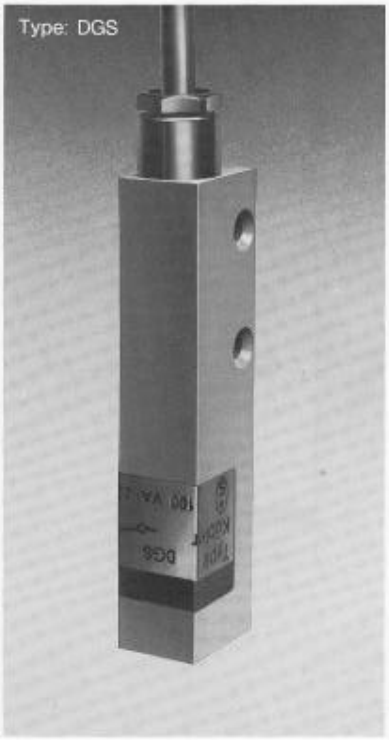

Technical Data:

Switching action:	monostable
Contact material:	rhodium
Making and breaking capacity:	max. 100 A
Switching voltage:	max. 250 V≃
Switching current:	max. 2 A
Switching frequency:	300 switches/second
Switching hysteresis:	approx. 3 - 4 mm
Permissible ambient temperature:	−10° C – +80° C
Protection mode:	IP 54
Connecting cable:	NYLHY 2 x 0.75 mm²
Casing:	glass fibre reinforced polyamide

For spacings, leaf 12.

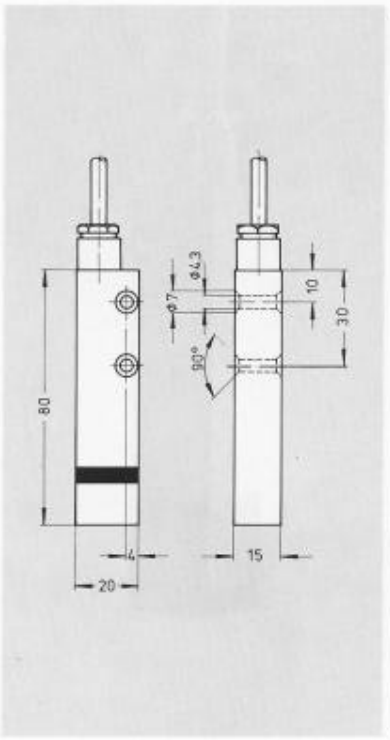

Magnetic Switch in Aluminum Casing

Technical Data:

Switching action:	FKS-AL monostable FKOM-AL polarized
Contact material:	rhodium
Making and breaking capacity:	max. 10 VA
Switching voltage:	max. 250 V≃
Switching current:	max. 0.5 A
Switching frequency:	1000 switches/second
Switching hysteresis:	approx. 5 mm
Permissible ambient temperature:	−10° C – +80° C
Protection mode:	IP 65
Connecting cable:	NYLHY-J 3 x 0.75 mm²
Casing:	aluminium

For spacings, see leaf 12.

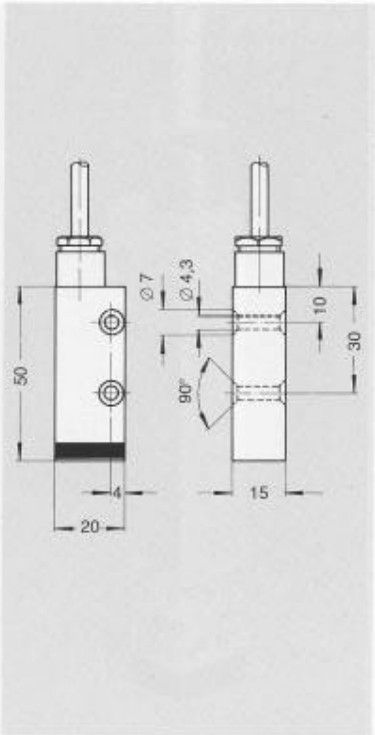

Technical Data:

Switching action:	bistable
Contact material:	rhodium
Making and breaking capacity:	max. 10 VA
Switching voltage:	max. 250 V≃
Switching current:	max. 0.5 A
Switching frequency:	1000 switches/second
Permissible ambient temperature:	−10° C – +80° C
Protection mode:	IP 65
Connecting cable:	NYLHY 3 x 0.75 mm²
Casing:	aluminium

For spacings, see leaf 12.

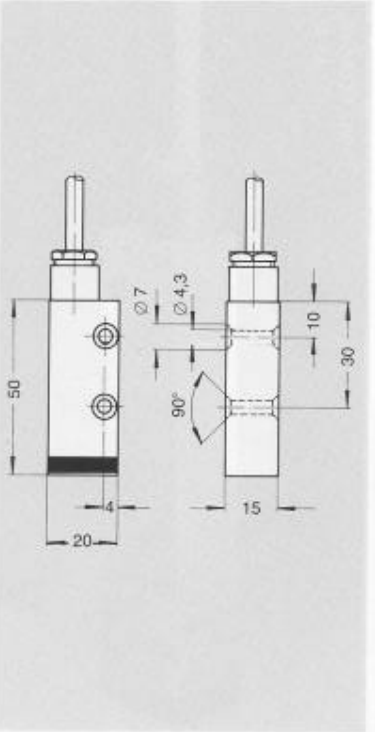

Magnetic Switch in Aluminum Casing

Technical Data:

Switching action:	monostable
Contact material:	rhodium
Making and breaking capacity:	FLS-AL max. 60 VA FLU-AL max. 40 VA
Switching voltage:	max. 250 V≃
Switching current:	FLS-AL max. 2 A FLU-AL max. 40 VA
Switching frequency:	300 switches/second
Switching hysteresis:	approx. 5 mm
Permissible ambient temperature:	−10° C – +80° C
Protection mode:	IP 65
Connecting cable:	FLS-AL NYLHY-J 3 x 0.75 mm² FLU-AL NYLHY-J 4 x 0.75 mm²
Casing:	aluminium

For spacings, see leaf 12.

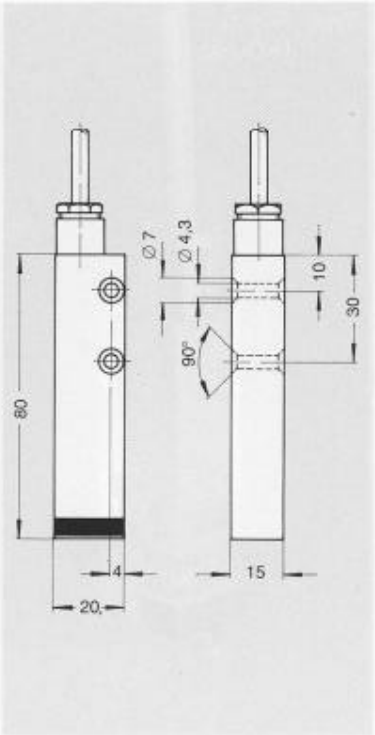

Technical Data:

Switching action:	bistable
Contact material:	rhodium
Making and breaking capacity:	FLSM-AL max. 100 VA FLUM-AL max. 40 A
Switching voltage:	max. 250 V≃
Switching current:	FLSM-AL max. 2 A FLUM-AL max. 1 A
Switching frequency:	300 switches/second
Permissible ambient temperature:	−10° C – +80° C
Protection mode:	IP 65
Connecting cable:	FLSM-AL NYLHY-J 3 x 0.75 mm² FLUM-AL NYLHY-J 4 x 0.75 mm²
Casing:	aluminium

For spacings, see leaf 12.

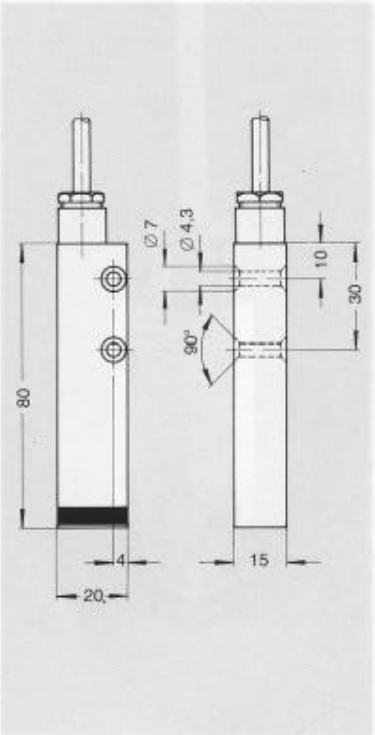

Magnetic Switch in Aluminum Casing

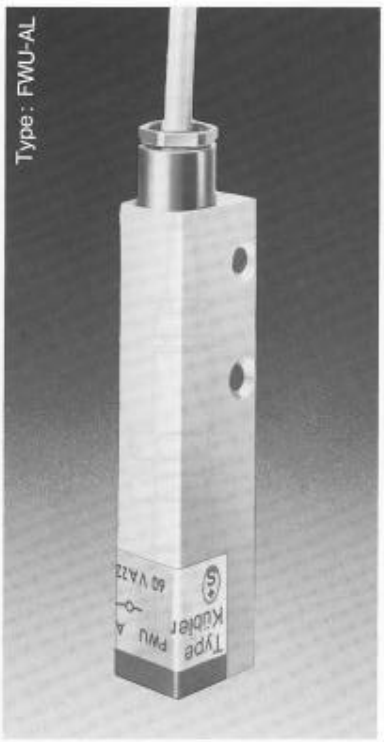

Technical Data:

Switching action:	monostable
Contact material:	tungsten
Making and breaking capacity:	max. 60 VA
Switching voltage:	max. 250 V≃
Switching current:	max. 1 A
Switching frequency:	100 switches/second
Switching hysteresis:	approx. 2 - 3 mm
Permissible ambient temperature:	−10° C – +80° C
Protection mode:	IP 65
Connecting cable:	NYLHY-J 4 x 0.75 mm²
Casing:	aluminium

For spacings, see leaf 12.

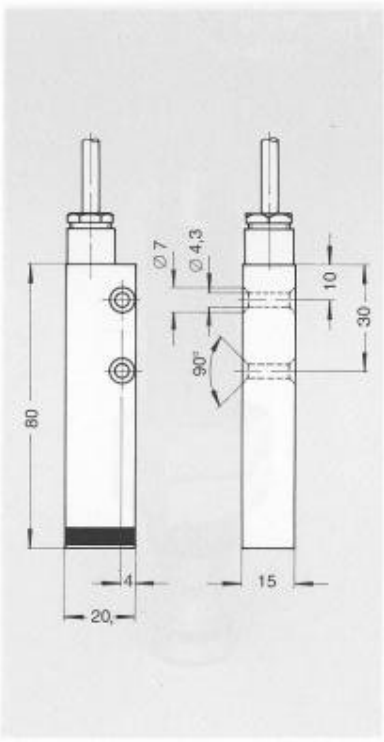

Technical Data:

Switching action:	monostable
Contact material:	rhodium
Making and breaking capacity:	max. 100 VA
Switching voltage:	max. 250 V≃
Switching current:	max. 2 A
Switching frequency:	300 switches/second
Switching hysteresis:	approx. 3 - 4 mm
Permissible ambient temperature:	−10° C – +80° C
Protection mode:	IP 65
Connecting cable:	NYLHY-J 3 x 0.75 mm²
Casing:	aluminium

For spacings, see leaf 12.

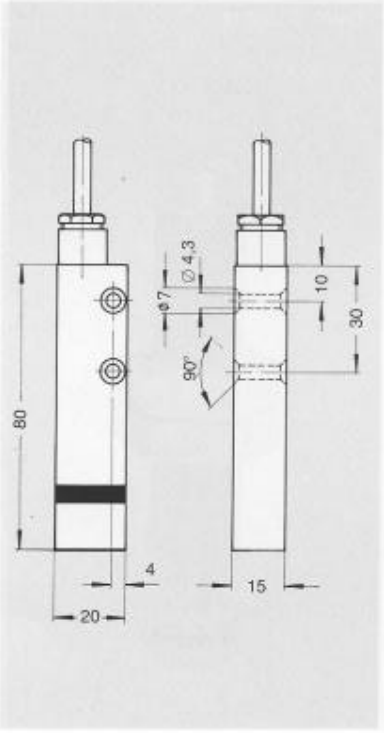

Magnetic Switch with Contact-free, Electronic Output

Technical Data:

Switching action:	TRS 18 monstable TROM 18 polarized
Output:	without contact
Making and breaking capacity:	max. 500 VA
Switching voltage:	max. 250 V≃
Switching current:	max. 2 A
Making delay:	0.2 ms
Breaking delay:	10 ms
Switching frequency:	100 switches/second
Permissible ambient temperature:	−10° C – +50° C
Protection mode:	IP 65
Connecting cable:	NYLHY 2 x 0.75 mm²
Casing:	polyamide

For spacings, see leaf 12.

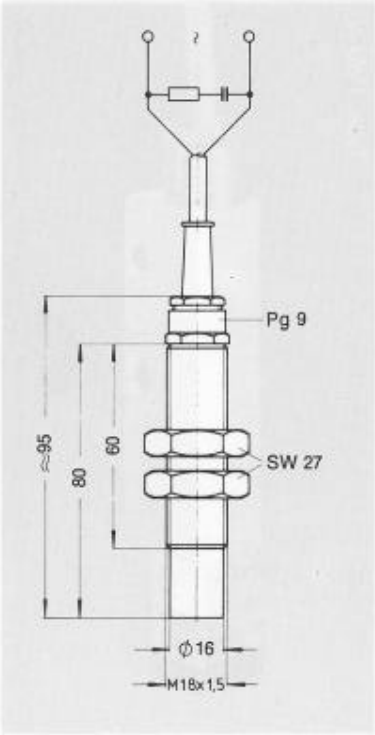

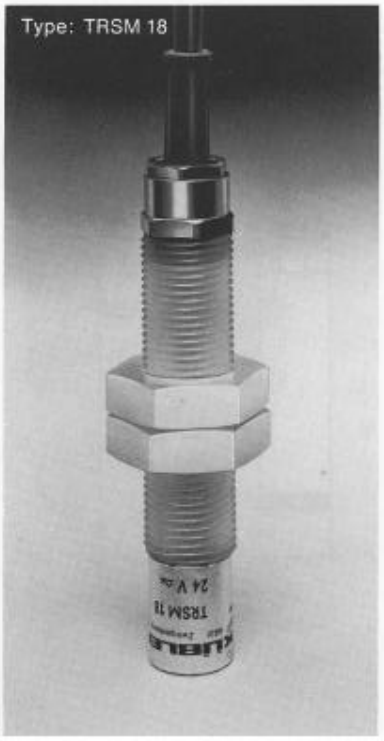

Technical Data:

Switching action:	bistable
Output:	without contact
Making and breaking capacity:	max. 500 VA
Switching voltage:	max. 250 V≃
Switching current:	max. 2 A
Making delay:	0.2 ms
Breaking delay:	10 ms
Switching frequency:	100 switches/second
Permissible ambient temperature:	−10° C – +50° C
Protection mode:	IP 65
Connecting cable:	NYLHY 2 x 0.75 mm²
Casing:	polyamide

For spacings, see leaf 12.

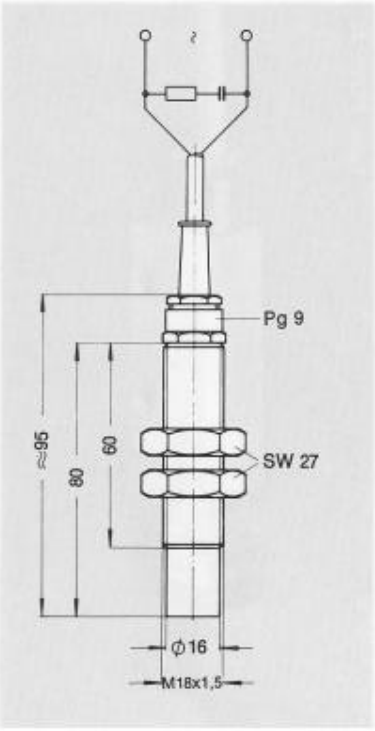

Magnetic Switch in Stainless Steel Casing Material Number 1.4571

Technical Data:

Switching action:	monostable
Contact material:	rhodium
Making and breaking capacity:	closing switch max. 60 VA changeover switch max. 40 VA
Switching voltage:	max. 250 V≃
Switching current:	closing switch max. 2 A changeover switch max. 1 A
Switching frequency:	300 switches/second
Switching hysteresis:	approx. 5 mm
Permissible ambient temperature:	−10° C – +80° C
Protection mode:	IP 65
Connecting cable:	closing switch NYLHY 2 x 0.75 mm² changeover switch NYLHY 3 x 0.75 mm
Casing:	special steel W No. 1.4571

For spacings, see leaf 12.

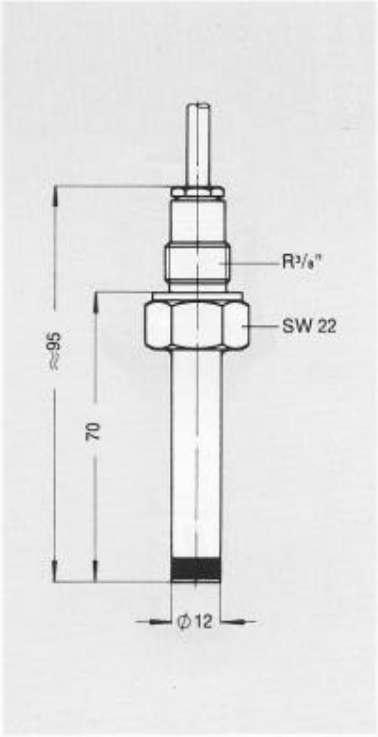

Technical Data:

Switching action:	monostable
Contact material:	rhodium
Making and breaking capacity:	max. 100 VA
Switching voltage:	max. 250 V≃
Switching current:	max. 2 A
Switching frequency:	300 switches/second
Switching hysteresis:	approx. 3 - 4 mm
Permissible ambient temperature:	−10° C – +80° C
Protection mode:	IP 65
Connecting cable:	NYLHY 2 x 0.75 mm²
Casing:	special steel W No. 1.4571

For spacings, leaf 12.

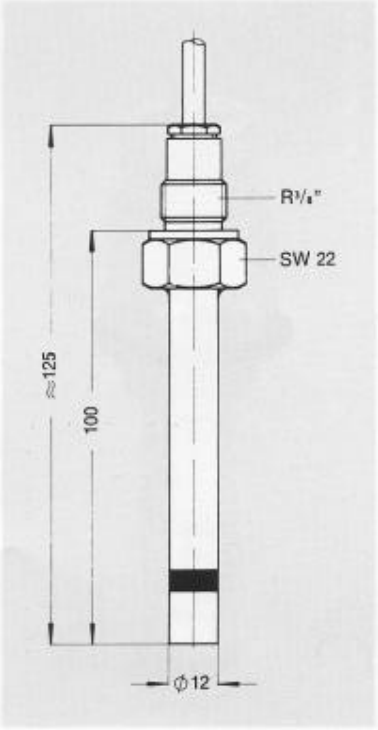

Magnetic Switch in Stainless Steel Casing and Slotted Magnetic Switch

Technical Data:

Switching action:	bistable
Contact material:	rhodium
Making and breaking capacity:	closing switch and opening contact max. 100 VA changeover switch max. 40 VA
Switching voltage:	max. 250 V≃
Switching current:	closing switch and opening contact max. 2 A changeover switch max. 1 A
Switching frequency:	300 switches/second
Permissible ambient temperature:	−10° C – +80° C
Protection mode:	IP 65
Connecting cable:	closing switch and opening contact NYLHY 2 x 0.75 mm² changeover switch NYMHY 3 x 0.75 mm²
Casing:	special steel W No. 1.4571

For spacings, see leaf 12.

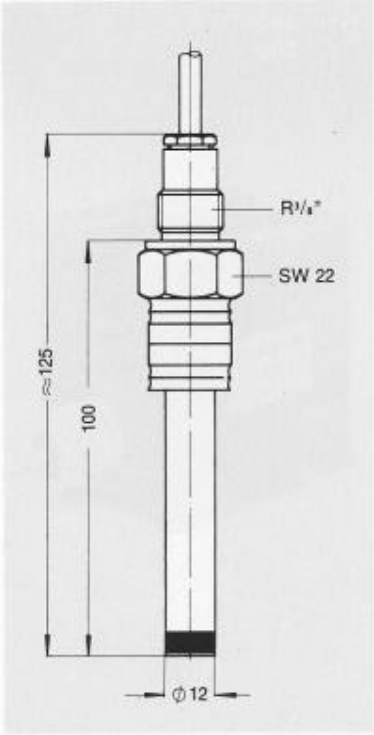

Technical Data:

Contact material:	tungsten
Making and breaking capacity:	max. 60 VA
Switching voltage:	max. 250 V≃
Switching current:	max. 1 A
Switching frequency:	100 switches/second
Switching hysteresis:	approx. 3 - 5 mm
Permissible ambient temperature:	−10° C – +80° C
Protection mode:	IP 54
Connecting cable:	KSWO NYLHY 2 x 0.75 mm² KSWU NYLHY 3 x 0.75 mm²
Casing:	glass fibre reinforced polyamide

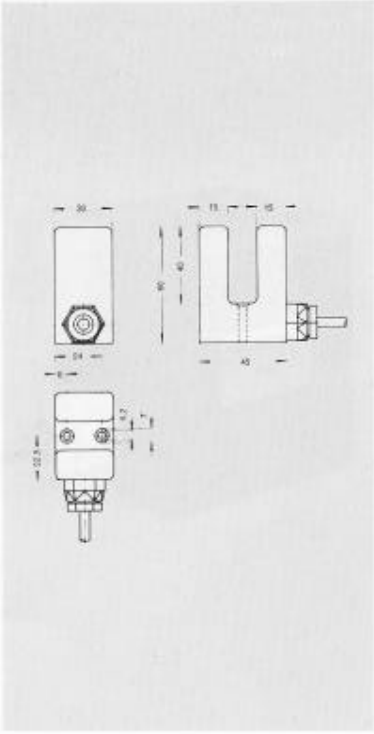

Slotted Magnetic Switch for Contact-free Operation by Means of a Sheet Iron Vane

Technical Data:

Contact material:	rhodium
Making and breaking capacity:	SRO max. 100 VA SRU max. 40 VA
Switching voltage:	max. 250 V≃
Switching current:	SRO max. 2 A SRU max. 1 A
Switching frequency:	100 switches/second
Switching hysteresis:	SRO approx. 10 - 12 mm SRU approx. 10 - 15 mm
Permissible ambient temperature:	−10° C – +80° C
Protection mode:	IP 65
Connecting cable:	SRO NYLHY 2 x 0.75 mm² SRU NYLHY 3 x 0.75 mm²
Casing:	glass fibre reinforced polyamide

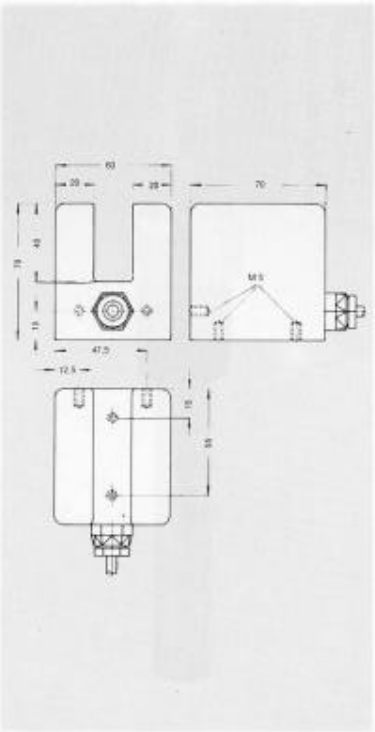

Technical Data:

Contact material:	tungsten
Making and breaking capacity;	max. 60 VA
Switching voltage:	max. 250 V≃
Switching current:	max. 1 A
Switching frequency:	100 switches/second
Switching hysteresis:	approx. 3 - 5 mm
Permissible ambient temperature:	−10° C – +80° C
Protection mode:	IP 65
Connecting cable:	SWO NYLHY 2 x 0.75 mm² SWU NYLHY 3 x 0.75 mm²
Casing:	glass fibre reinforced polyamide

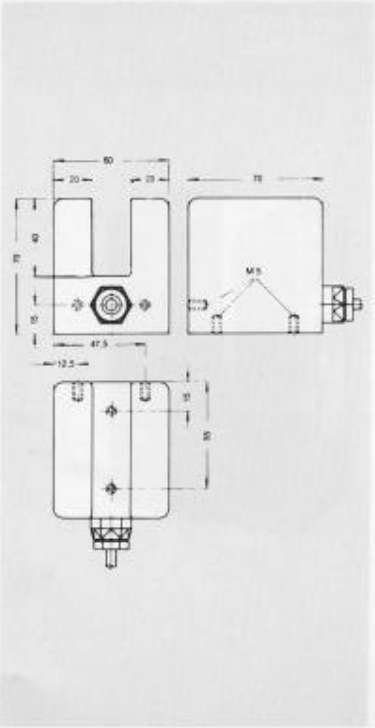

Scanning Magnetic Switch

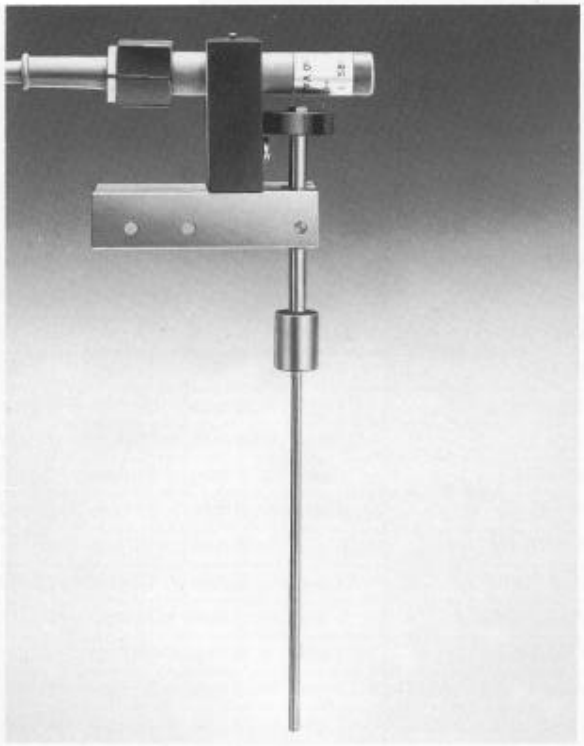

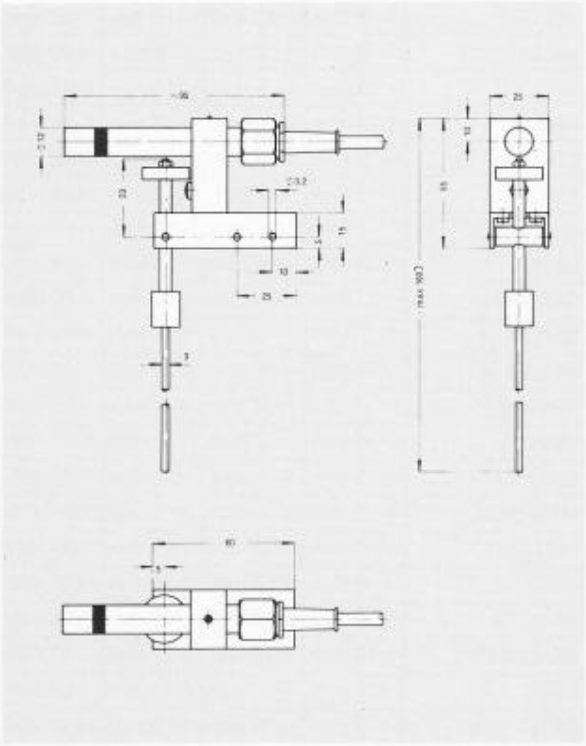

Type: KRS-T KRU-T

Technical Data:

Switching action:	monostable
Contact material:	rhodium
Making and breaking capacity:	KRS-T max. 60 VA KRU-T max. 40 VA
Switching voltage:	max. 250 V≃
Switching current:	KRS-T max. 2 A KRU-T max. 1 A
Switching frequency:	300 switches/second
Switching hysteresis:	approx. 5 mm
Permissible ambient temperature:	−10° C – +80° C
Protection mode:	IP 65
Connecting cable:	KRS-T NYLHY 2 x 0.75 mm² KRU-T NYLHY 3 x 0.75 mm²
Casing:	glass fibre reinforced polyamide

Type: GMS-T GMU-T

Technical Data:

Switching action:	monostable
Contact material:	rhodium
Making and breaking capacity:	GMS-T max. 100 VA GMU-T max. 40 VA
Switching voltage:	max. 250 V≃
Switching current:	GMS-T max. 2 A GMU-T max. 1 A
Switching frequency:	300 switches/second
Switching hysteresis:	GMS-T approx. 3 - 4 mm GMU-T approx. 5 mm
Permissible ambient temperature:	−10° C – +80° C
Protection mode:	IP 65
Connecting cable:	GMS-T NYLHY 2 x 0.75 mm² GMU-T NYLHY 3 x 0.75 mm²
Casing:	glass fibre reinforced polyamide

Spacing

Magnet switch	Magnets				Magnet switch	Magnets			
	M 0	M 1	M 2	M 3		M 0	M 1	M 2	M 3
MS-L40	≈ 8 mm	≈12 mm	≈19 mm	≈40 mm	DRUM	≈ 8 mm	≈15 mm	≈20 mm	≈45 mm
VS-L40	≈ 8 mm	≈12 mm	≈19 mm	≈40 mm	DWU	≈ 5 mm	≈ 8 mm	≈13 mm	≈30 mm
MS-L55	≈ 8 mm	≈12 mm	≈19 mm	≈40 mm	DGS	≈ 3 mm	≈ 5 mm	≈ 9 mm	≈21 mm
VS-L55	≈ 8 mm	≈12 mm	≈19 mm	≈40 mm	FKS-AL	≈ 4 mm	≈ 7 mm	≈11 mm	≈27 mm
MRS 9	≈ 3 mm	≈ 6 mm	≈10 mm	≈27 mm	FKOM-AL	≈11 mm	≈15 mm	≈21 mm	≈40 mm
KRS 9	≈ 3 mm	≈ 6 mm	≈10 mm	≈27 mm	FKSM-AL	≈17 mm	≈24 mm	≈30 mm	≈55 mm
KRU 9	≈ 5 mm	≈ 9 mm	≈14 mm	≈30 mm	FLS-AL	≈ 5 mm	≈ 7 mm	≈11 mm	≈27 mm
KWU 9	≈ 4 mm	≈ 7 mm	≈11 mm	≈26 mm	FLU-AL	≈ 3 mm	≈ 5 mm	≈ 9 mm	≈17 mm
GMS 9	≈ 3 mm	≈ 6 mm	≈10 mm	≈22 mm	FLSM-AL	≈14 mm	≈20 mm	≈28 mm	≈55 mm
GMU 9	≈ 3 mm	≈ 5 mm	≈ 8 mm	≈19 mm	FLUM-AL	≈ 8 mm	≈15 mm	≈20 mm	≈45 mm
GMSM 16	≈17 mm	≈25 mm	≈32 mm	≈60 mm	FWU-AL	≈ 5 mm	≈ 8 mm	≈13 mm	≈30 mm
GMOM 16	≈ 7 mm	≈12 mm	≈17 mm	≈40 mm	FGMS-AL	≈ 3 mm	≈ 5 mm	≈ 9 mm	≈21 mm
GMUM 16	≈10 mm	≈16 mm	≈23 mm	≈50 mm	TRS 18	≈ 4 mm	≈ 7 mm	≈11 mm	≈27 mm
MRS 10	≈ 4 mm	≈ 7 mm	≈11 mm	≈28 mm	TROM 18	≈21 mm	≈30 mm	≈38 mm	≈60 mm
MRS 12	≈ 4 mm	≈ 7 mm	≈11 mm	≈27 mm	TRSM 18	≈21 mm	≈28 mm	≈36 mm	≈60 mm
MRU 12	≈ 3 mm	≈ 6 mm	≈10 mm	≈28 mm	KRS 16-Ex	≈ 4 mm	≈ 7 mm	≈11 mm	≈28 mm
MRS 20	≈ 2 mm	≈ 4 mm	≈ 7 mm	≈24 mm	KRU 16-Ex	≈ 4 mm	≈ 6 mm	≈11 mm	≈27 mm
MRU 20	≈ 3 mm	≈ 6 mm	≈10 mm	≈26 mm	KWU 16-Ex	≈ 4 mm	≈ 6 mm	≈10 mm	≈28 mm
GMS 18	≈ 6 mm	≈10 mm	≈15 mm	≈35 mm	EVS-L70(KRS)	≈ 3 mm	≈ 6 mm	≈10 mm	≈27 mm
GMU 18	≈ 5 mm	≈ 8 mm	≈12 mm	≈26 mm	EVU-L70(KRU)	≈ 5 mm	≈ 9 mm	≈14 mm	≈30 mm
GMUM 18	≈13 mm	≈19 mm	≈27 mm	≈55 mm	EVS-L100(GMS)	≈ 3 mm	≈ 6 mm	≈10 mm	≈22 mm
DRS	≈ 5 mm	≈ 7 mm	≈11 mm	≈27 mm	EVSM-L100(GMSM)	≈17 mm	≈25 mm	≈32 mm	≈60 mm
DRU	≈ 3 mm	≈ 5 mm	≈ 9 mm	≈17 mm	EVOM-L100(GMOM)	≈ 7 mm	≈12 mm	≈17 mm	≈40 mm
DRSM	≈14 mm	≈20 mm	≈28 mm	≈58 mm	EVUM-L100(GMUM)	≈10 mm	≈16 mm	≈23 mm	≈50 mm

KSR KUEBLER

KSR KUEBLER
Niveau-Messtechnik AG

69439 Zwingenberg
Germany
Tel ++49 (0) 62 63 - 87- 0
Fax ++49 (0) 62 63 - 87 99

info@ksr-kuebler.com
www.ksr-kuebler.com

KUBLER FRANCE S.A.
68700 Cernay

KSR KUEBLER (UK)
Level Measurement & Control Ltd.
Molesey, Surrey KT8 1QZ

KSR KUEBLER (Scandinavia)
2970 Hoersholm

KSR KUEBLER (ITALY)
Misura di Livello

KSR KUEBLER (USA)
Level Control Products of America Inc.
Charlotte, NC 28273

KSR KUEBLER (SINGAPORE)
Level Measurement & Control Pte. Ltd.
Singapore 608609

SHANGHAI KSR KUEBLER
Automation Instruments Co. Ltd.
Shanghai / China

10.03/1000 WRB/ST
Printed in Germany